ALLIANCE MALL DEVELOPERS CO. PVT. LTD.

CIN : U70101MH2007PTC173672

22.03.2016

The Member Secretary,
Ministry of Environment Forest and Climate Change,
Jor Bagh Road, New Delhi- 110 003

Sub: Submission of additional details for **Existing Mall** (Mall, Multiplex, Restaurant, Food Court), **Proposed Guest House & Residential Development** at Saravanampatti Village, Coimbatore North Taluk, Coimbatore District, Tamil Nadu under Schedule 8(a) by Alliance Mall Developers Co. Pvt.Ltd.

Ref: Minutes of 3rd Expert Appraisal Committee (Infra-2) held on 23rd February, 2016 - **Agenda No. 3.2.10 scheduled on 23/02/2016**
File No. 21-79/2015-IA-III

Dear Sir,

With reference to the above subject, please find enclosed the reply to the minutes pls. find the final details with respect to the project enclosed along with this letter.

Further to EAC directions given in meeting held on 30th Jul 2015 and our subsequent submission of details on 10th Sep 2015, subject of our file has been changed to "**Existing Mall** (Mall, Multiplex, Restaurant, Food Court), **Proposed Guest House & Residential Development** at SF No 199/1, 200, 201, 2016, 205 Part, Saravanampatti Village, Coimbatore (Tamil Nadu)"

We request to provide us with the Environmental Clearance for the project at the earliest.

Thanking you
For **Alliance Mall Developers Co. Pvt.Ltd**

Authorised Signatory

ALLIANCE MALL DEVELOPERS CO. PVT. LTD.

105/106, PROVOGUE HOUSE, OFF. NEW LINK ROAD
ANDHERI (W), MUMBAI - 400 053
T : +91 22 3065 3111 / 3065 3222 | F : +91 22 3068 0570

M/s. Alliance Mall Developers Co. Pvt.Ltd. – Proposed Mall and Residential development at Saravanampatti Village, Coimbatore North Taluk, Coimbatore District, Tamil Nadu under Schedule 8(a)

ADDITIONAL PARTICULARS

S.No	Query	Reply
1.	Fresh form 1,1A and conceptual plan.	The Fresh form 1, 1A and conceptual plan is enclosed in Annexure – 1.
2.	Tabular statement mentioning details of the existing EC and proposed changes.	Tabular statement mentioning details of the existing EC and proposed changes is enclosed in Annexure – 2
3.	Monitoring report from the Regional Office, Chennai for the current status of compliance of the existing EC's conditions to be submitted.	Monitoring report from the Regional Office, Chennai for the current status of compliance of the existing EC's conditions is enclosed in Annexure – 3
4.	A report on mandatory compliance measures taken for proposed buildings as recommended in the Energy conservation building code(ECBC) 2007 of the Bureau of Energy Efficiency, Government of India	A report on mandatory compliance measures taken for proposed buildings as recommended in the Energy conservation building code(ECBC) 2007 of the Bureau of Energy Efficiency, Government of India is enclosed in Annexure - 4
5.	Solar power to be included	The solar power is included in Annexure - 5
6.	Details of rain water harvesting system to be incorporated.	Details of Rain water harvesting system is enclosed in Annexure - 6
7.	Norms for solid waste management.	The solid waste management norms considered from National Building Code (NBC) norms. The detailed solid waste generation and management is given in Annexure - 7
8.	Details of car parking norms to be followed.	The car parking details are given in Annexure – 8. The National Building Code (NBC) norms are followed in calculating the parking details.
9.	Fresh water balance. Source of water supply	The water balance details is given in Annexure – 9 The source of water will be met from ground water, the required approval copy is enclosed in Annexure - 10
10.	STPs should be located at one place	The STPs cannot be located in one place as the proposed mall and residential is located in different places. As clearly shown in Annexure - 11
11.	Details of DG sets and its stack height as well as acoustic enclosure.	Details of DG sets and its stack height is enclosed in Annexure – 12

APPENDIX I

FORM-1

(I) Basic Information

<table>
<tr><th>#</th><th>Item</th><th>Details</th></tr>
<tr><td>1.</td><td>Name of the Project</td><td>Mall (Mall, Multiplex, Restaurant, Food Court),
Guest House & Residential development</td></tr>
<tr><td>2.</td><td>S. No. in the schedule</td><td>8 (a)</td></tr>
<tr><td>3.</td><td>Proposed capacity/area/length/tonnage to be handled/command area/lease area/number of wells to be drilled.</td><td>Total Plot Area: 99,552.65 sq .m
<table>
<tr><th>Particulars</th><th>Existing</th><th>Proposed</th><th>Total</th></tr>
<tr><td>Built up</td><td>67557.07 sq mt</td><td>64512.01 sq mt (Resi+ Guest house)</td><td>1,32,069.08 sq mt</td></tr>
</table></td></tr>
<tr><td>4.</td><td>New/Expansion/Modernization</td><td>Expansion.
(Amendment to the EC obtained for Mall vide Lr. No. SEIAA/TN/F.459/EC 8 (a) 163/2012 dated 03/05/2013) EC enclosed in Annexure-1</td></tr>
<tr><td>5.</td><td>Existing Capacity/Area etc.</td><td>Built up area of 56,721.88 Sq.mts. already approved is under construction.</td></tr>
<tr><td>6.</td><td>Category of Project i.e., ‘A’ or ‘B’</td><td>B 2</td></tr>
<tr><td>7.</td><td>Does it attract general condition? If yes, please specify.</td><td>No</td></tr>
<tr><td>8.</td><td>Does it attract specific condition? If Yes, please specify.</td><td>No</td></tr>
<tr><td rowspan="6">9.</td><td>Location</td><td></td></tr>
<tr><td>Plot/Survey/Khasra No.</td><td>SF No. 199/1, 200, 201, 206, 205/2Part</td></tr>
<tr><td>Village</td><td>Saravanampatti</td></tr>
<tr><td>Tehsil</td><td>Coimbatore North</td></tr>
<tr><td>District</td><td>Coimbatore</td></tr>
<tr><td>State</td><td>Tamil Nadu</td></tr>
<tr><td>10.</td><td>Nearest Railway Station/Airport along with distance in kms.</td><td>Peelamedu 4.0 km
Airport 6.0 Km</td></tr>
<tr><td>11.</td><td>Nearest Town, City, District Headquarters along with distance</td><td>Within Coimbatore Corporation limits</td></tr>
</table>

#	Item	Details
	in kms.	
12.	Village Panchayats, Zilla Parishad, Municipal Corporation, Local body (complete postal addresses with telephone nos. to be given)	Coimbatore Municipal Corporation Corporation of Coimbatore Coimbatore - 641 001 (422) 2398786 ,2395884
13.	Name of Applicant	**M/s Alliance Mall Developers Co Pvt. Ltd**
14.	Registered Address	105/106, Provogue House, Off. New Link Road, Andheri (W), Mumbai 400 053
15.	Address for correspondence:	105/106, Provogue House, Off. New Link Road, Andheri (W), Mumbai 400 053
	Name	Sudhanshu Chaturvedi
	Designation (Owner/Partner/CEO)	Director
	Address	Alliance Mall Developers Co. Pvt. Ltd. 201, Sathyamangalam Road Saravanampatti - PO Coimbatore
	Pin Code	641035
	E – mail	sudhanshu.chaturvedi@prozoneintu.com
	Telephone No.	09819995411
	Fax. No.	-
16.	Details of Alternate Sites examined, if any. Location of these sites should be shown on a topo sheet	Not Applicable
17.	Interlinked Projects	No
18.	Whether separate application of interlinked project has been submitted?	No
19.	If yes, date of submission	Not Applicable
20.	If no, reason	Not Applicable
21.	Whether the proposal involves approval/clearance under: if yes, details of the same and their status	Not Applicable

#	Item	Details
	to be given. (a) The Forest (Conservation) Act, 1980? (b) The Wildlife (Protection) Act, 1972? (c) The C.R.Z. Notification, 1991?	
22.	Whether there is any Government Order/Policy relevant/relating to the site?	Already EC obtained for Mall vide Lr. No. SEIAA/TN/F.459/EC 8 (a)163/2012 dated 03/05/2013
23.	Forest Land involved (hectares)	None
24.	Whether there is any litigation pending against the product and/or land in which the project is propose to set up? (a) Name of the Court (b) Case. No. (c) Orders/Directions of the court, if any and its relevance with the proposed project.	Not Applicable

(II) Activity

1. **Construction, operation or decommissioning of the Project involving actions, which will cause physical changes in the locality (topography, land use, changes in water bodies, etc.)**

Sr. No.	Information/ Checklist Confirmation	Yes/No	Details thereof (with approximate quantities/ rates, wherever possible) with source of information data
1.1	Permanent or temporary change in land use, land cover or topography including increase in intensity of land use (with respect to local land use plan)	Yes	The present land use is Commercial. The developer has proposed a Guest House and Residential units on this land as allowed under this category. The land conversion Gazette is enclosed as **Annexure-2.**
1.2	Clearance of existing land, vegetation and building?	Yes	There are small herbs and shrubs present on this land which has to be cleared.
1.3	Creation of new land uses	Yes	The proposed project will be development of Guest House and residential units
1.4	Pre-construction investigations e.g. bore houses, soil testing?	Yes	The soil Testing has been done and construction has already started for mall.
1.5	Construction works?	Yes	At present, the proposed project is construction of Mall (Mall, Multiplex, Restaurant, Food court).
1.6	Démolition Works?	Yes	The existing old structures of Mill with an area 1,254.82 Sq m. have been demolished.
1.7	Temporary sites used for construction works or housing of construction workers?	No	Construction workers will be hired from nearby villages.
1.8	Above ground buildings, structures or earthworks including linear	Yes	Approximately around 32,770 m^3 of soil would be excavated for foundations. The excavated soil will be refilled. Top soil will be stored separately and used for green belt development. Excess soil will be

<table>
<tr><th>Sr. No.</th><th>Information/ Checklist Confirmation</th><th>Yes/No</th><th>Details thereof (with approximate quantities/ rates, wherever possible) with source of information data</th></tr>
<tr><td></td><td>structures, cut and fill or excavations</td><td></td><td>utilised for road construction.</td></tr>
<tr><td>1.9</td><td>Underground works including mining or tunneling?</td><td>No</td><td>Not Applicable</td></tr>
<tr><td>1.10</td><td>Reclamation works?</td><td>No</td><td>Not Applicable</td></tr>
<tr><td>1.11</td><td>Dredging?</td><td>No</td><td>Not Applicable</td></tr>
<tr><td>1.12</td><td>Offshore structures?</td><td>No</td><td>Not Applicable</td></tr>
<tr><td>1.13</td><td>Production and manufacturing Process?</td><td>No</td><td>Not Applicable</td></tr>
<tr><td>1.14</td><td>Facilities for storage of goods or materials?</td><td>Yes</td><td>Temporary storage will be done at the project site during the construction phase.
Existing old structures will be utilized & Separate raw material handling yard will be made as per requirement. Cement will be separately stored under covered bags. Sand will be stacked neatly under tarpaulin cover. Bricks and steel will be laid in open.
The raw material handling yard will be located within the project site and separated by enclosures.</td></tr>
<tr><td>1.15</td><td>Facilities for treatment or disposal of solid waste or liquid effluents?</td><td>Yes</td><td><u>Solid Waste</u>
<table><tr><th>Particulars</th><th>Existing</th><th>Proposed</th><th>Total</th></tr><tr><td>Organic</td><td>1786kg/day</td><td>392 kg/day</td><td>2178 kg/day</td></tr><tr><td>STP Sludge (used in manure)</td><td>17 kg/day</td><td>40 kg/day</td><td>57 kg/day</td></tr><tr><td>Inorganic</td><td>2183kg/day</td><td>914 kg/day</td><td>3097 kg/day</td></tr></table></td></tr>
</table>

<table>
<tr><th>Sr. No.</th><th>Information/ Checklist Confirmation</th><th>Yes/No</th><th>Details thereof (with approximate quantities/ rates, wherever possible) with source of information data</th></tr>
<tr><td></td><td></td><td></td><td>
<table>
<tr><td>Total</td><td>3969kg/day</td><td>1306 kg/day</td><td>5275 kg/day</td></tr>
</table>

<u>Liquid Effluents</u>

Existing Mall (Mall, Multiplex, Restaurant, Food Court)
<table>
<tr><th>Phase</th><th>Population</th><th>Quantity of Fresh water required</th><th>Sewage/ Effluent generated</th><th>Treatment method</th></tr>
<tr><td>Construction</td><td>200</td><td>Construction water – 25 KLD
Workers - 9 KLD</td><td>7.2 KLD</td><td>Septic tanks with soak pits</td></tr>
<tr><td>Operation</td><td>Temp. 11000</td><td>36 KLD</td><td>188 KLD</td><td>STP of 207 KLD</td></tr>
</table>

Proposed Guest House & Residential development
<table>
<tr><th>Phase</th><th>Population</th><th>Quantity of Fresh water required</th><th>Sewage/ Effluent generated</th><th>Treatment method</th></tr>
<tr><td>Construction</td><td>200</td><td>Construction water – 25 KLD
Workers - 9 KLD</td><td>7.2 KLD</td><td>Septic tanks with soak pits</td></tr>
<tr><td>Operation</td><td>2700</td><td>261 KLD</td><td>330KLD</td><td>STP of 390 KLD</td></tr>
</table>

Water Balance in monsoon and non – monsoon is enclosed in Annexure-3. Water supply letter from TWAD is enclosed as Annexure-4. CGWB NOC is enclosed in Annexure-5
</td></tr>
<tr><td>1.16</td><td>Facilities for long term housing of operational workers?</td><td>No</td><td>No long-term housing facilities proposed as most of the skilled/unskilled manpower required for the construction /operation activities will be hired from the surrounding villages.</td></tr>
<tr><td>1.17</td><td>New road, rail or sea traffic during construction of</td><td>No</td><td>The existing road near to the site will be utilized.</td></tr>
</table>

Sr. No.	Information/ Checklist Confirmation	Yes/No	Details thereof (with approximate quantities/ rates, wherever possible) with source of information data
	operation?		
1.18	New road, rail, air waterborne or other transport infrastructure including new or altered routes and stations, ports, airports etc.?	No	Not applicable
1.19	Closure or diversion of existing transport routes or infrastructure leading to changes in traffic movements?	No	There will not be any closure or diversion of existing transportation routes
1.20	New or diverted transmission lines or pipelines?	No	Not envisaged
1.21	Impoundment, damming, culverting, realignment or other changes to the hydrology of watercourses or aquifers?	No	Not Applicable
1.22	Stream crossings?	No	There are no streams passing the site
1.23	Abstraction or transfers of water from ground or surface waters?	Yes	Water will be procured from Municipality for drinking purpose and also ground water for other domestic use.

Sr. No.	Information/ Checklist Confirmation	Yes/No	Details thereof (with approximate quantities/ rates, wherever possible) with source of information data
1.24	Changes in water bodies or the land surface affecting drainage or run-off	No	There will not be any change in the drainage pattern.
1.25	Transport of personnel or materials for construction, operation or decommissioning?	Yes	The existing road near by the site will be utilized for the transportation of material and personnel during construction and operation phase.
1.26	Long-term dismantling or decommissioning or restoration works?	No	Not Applicable
1.27	Ongoing activity during decommissioning which could have an impact on the environment?	No	Not Applicable
1.28	Influx of people to an area in either temporarily or permanently?	Yes	Influx of the people in both phases will be temporary. **Construction phase** Around 200 people will be engaged for the activity temporarily. **Operation phase** In the proposed project Mall (Mall, Multiplex, Restaurant, Food Court) is already approved. For proposed Guest House and Residential development, there will be permanent influx of

Sr. No.	Information/ Checklist Confirmation	Yes/No	Details thereof (with approximate quantities/ rates, wherever possible) with source of information data
			2700 Nos. and temporary influx of 200 people.
1.29	Introduction of alien species?	No	Not envisaged
1.30	Loss of native species or genetic diversity?	No	Not envisaged
1.31	Any other actions?	No	-

2. Use of Natural resources for construction or operation of Project (such as land, water, materials or energy, especially any resources which are non-renewable or in short supply).

<table>
<tr><th>Sr. No.</th><th>Information/Checklist Confirmation</th><th>Yes/No</th><th>Details thereof (with approximate quantities/ rates, wherever possible) with source of information data</th></tr>
<tr><td>2.1</td><td>Land specially undeveloped or agricultural land (ha)</td><td>No</td><td>The land use is Commercial where in Residential is allowed as per DTCP GO MS 1730 dated 24th Jul 1974, enclosed in Annexure 2.</td></tr>
<tr><td>2.2</td><td>Water (expected source & competing users) unit KLD</td><td>Yes</td><td>The total water requirement for the proposed Guest House & Residential development will be 410KLD
<table>
<tr><th>Source</th><th>Quantity</th><th>Source</th></tr>
<tr><td>Fresh water requirement</td><td>261 KLD</td><td>Ground water and TWAD</td></tr>
<tr><td>Treated waste water for toilet flushing and gardening</td><td>149</td><td>Recycled from STP</td></tr>
</table>
Water balance is enclosed in Annexure 3.
<table>
<tr><th>Particulars</th><th>Existing</th><th>Proposed</th><th>Total</th></tr>
<tr><td>Total Water Requirement</td><td>196 KLD</td><td>410 KLD</td><td>606 KLD</td></tr>
<tr><td>Fresh Water</td><td>36 KLD</td><td>261 KLD</td><td>297 KLD</td></tr>
<tr><td>Recycled Water</td><td>160 KLD</td><td>149 KLD</td><td>309 KLD</td></tr>
</table></td></tr>
<tr><td>2.3</td><td>Minerals (MT)</td><td>No</td><td>Not applicable</td></tr>
<tr><td>2.4</td><td>Construction material –</td><td>Yes</td><td>Cement - 715764 Bags</td></tr>
</table>

<table>
<tr><th>Sr. No.</th><th>Information/Checklist Confirmation</th><th>Yes/No</th><th>Details thereof (with approximate quantities/ rates, wherever possible) with source of information data</th></tr>
<tr><td></td><td>stone, aggregates, and/soil (expected source-MT)</td><td></td><td>Sand - 61269 m^3
Metal - 76198 m^3
Reinforcement steel – 8213 M.T
Source - Local suppliers</td></tr>
<tr><td>2.5</td><td>Forests and timber (source-MT)</td><td>No</td><td>Doors used will be flush doors or panel doors/laminated timbers. Aluminum frame windows will be used.</td></tr>
<tr><td>2.6</td><td>Energy including electricity and fuels (source, competing users) Unit: fuel (MT), energy (MW)</td><td>Yes</td><td><table><tr><th>Particulars</th><th>Existing</th><th>Proposed</th></tr><tr><td>Connected Load</td><td>8864 KVA</td><td>9525 KVA</td></tr><tr><td>Demand Load</td><td>4664 KVA</td><td>3232 KVA</td></tr></table>Power Source: TNEB</td></tr>
<tr><td>2.7</td><td>Any other natural resources (use appropriate standard units)</td><td>No</td><td>Not applicable.</td></tr>
</table>

3. Use, storage, transport, handling or production of substances or materials, which could be harmful to human health or the environment or raise concerns about actual or perceived risks to human health

Sr. No.	Information/Checklist Confirmation	Yes/No	Details thereof (with approximate quantities/ rates, wherever possible) with source of information data
3.1	Use of substances or materials, which are hazardous (as per MSIHC rules) to human health or the environment (flora, fauna, and water supplies)	No	Not Applicable
3.2	Changes in occurrence of disease or affect disease vectors (e.g. insect or water borne diseases)	No	Suitable drainage and waste management measures will be adopted in both construction and operational phase, which will restrict stagnation of water or accumulation of waste. This will effectively restrict the reproduction and growth of disease vectors.
3.3	Affect the welfare of people e.g. by changing living conditions?	No	Not envisaged
3.4	Vulnerable groups of people who could be affected by the project e.g. hospital patients, children, the elderly etc.,	No	Not envisaged
3.5	Any other causes	No	-

4. **Production of solid wastes during construction or operation or decommissioning (MT/month)**

<table>
<tr><th>Sr. No.</th><th>Information/ Checklist Confirmation</th><th>Yes/No</th><th>Details thereof (with approximate quantities/ rates, wherever possible) with source of information data</th></tr>
<tr><td>4.1</td><td>Spoil, overburden or mine wastes</td><td>No</td><td>Not envisaged</td></tr>
<tr><td>4.2</td><td>Municipal waste (domestic and or commercial wastes)</td><td>Yes</td><td>For proposed Guest House & Residential development About 1306 Kg / day of solid wastes are likely to be generated due to the proposed project.
<table>
<tr><th>Particulars</th><th>Existing</th><th>Proposed</th><th>Total</th></tr>
<tr><td>Organic</td><td>1786 kg/day</td><td>392 kg/day</td><td>2178 kg/day</td></tr>
<tr><td>STP Sludge</td><td>17 kg/day</td><td>40 kg/day</td><td>57 kg/day</td></tr>
<tr><td>Inorganic</td><td>2183 kg/day</td><td>914 kg/day</td><td>3097 kg/day</td></tr>
<tr><td>Total</td><td>3969 kg/day</td><td>1306 kg/day</td><td>5275 kg/day</td></tr>
</table>
Treatment Method: Organic waste converter shall be used to create manure: Inorganic waste shall be sold to authorized recyclers.
As per CPCB norms</td></tr>
<tr><td>4.3</td><td>Hazardous wastes (as per hazardous waste management rules)</td><td>No</td><td>Spent Oil from DG sets will be carefully stored in HDPE drums in isolated covered facility. This spent oil will be sold to vendors authorized by TNPCB/ MoEF for treatment of same. Suitable care will be taken so that spills / leaks of spent oil from storage could be avoided.</td></tr>
<tr><td>4.4</td><td>Other industrial process wastes</td><td>No</td><td>Not Applicable.</td></tr>
<tr><td>4.5</td><td>Surplus product</td><td>No</td><td>Not Applicable</td></tr>
<tr><td>4.6</td><td>Sewage sludge or other sludge from effluent treatment</td><td>Yes</td><td>Sewage sludge of 40 Kg generated from STP of Guest House & Residential Development will be used as manure.</td></tr>
<tr><td>4.7</td><td>Construction or demolition wastes</td><td>Yes</td><td>Construction waste generated will be limited to the construction phase and project site. These will be reused for backfilling after manual segregation. Unusable and excess construction debris will be disposed at designated places in tune with the local</td></tr>
</table>

Sr. No.	Information/ Checklist Confirmation	Yes/No	Details thereof (with approximate quantities/ rates, wherever possible) with source of information data
			norms.
4.8	Redundant machinery or equipment	No	Not Applicable
4.9	Contaminated soils or other materials	No	Not Applicable
4.10	Agricultural wastes	No	Not Applicable
4.11	Other solid wastes	No	Not Applicable

5. Release of pollutants or any hazardous, toxic or noxious substances to air (kg/hr)

Sr. No.	Information/Checklist Confirmation	Yes/No	Details thereof (with approximate quantities/ rates, wherever possible) with source of information data
5.1	Emissions from combustion of fossil fuels from stationary or mobile sources	Yes	During operation phase, DG set of, 1 x 400 kVA capacity provided for power back up will generate air pollutants like SO_X, NO_x. ➢ 1 Nos. Of DG stack with an adequate height shall be provided for safe emission of the flue gases. ➢ DG will be operated only during power failure ➢ While using DG unnecessary load will be eliminated to reduce the emission of pollutants **Construction Equipment's** **Construction equipment** | **Approx. Quantity** | **Operating hours/day** Concrete mix plant | 2 | 10 Crane mobile* | 1 | 5

<table>
<tr><th>Sr. No.</th><th>Information/Checklist Confirmation</th><th>Yes/No</th><th>Details thereof (with approximate quantities/ rates, wherever possible) with source of information data</th></tr>
<tr><td></td><td></td><td></td><td>
<table>
<tr><td>Dozer*</td><td>1</td><td>5</td></tr>
<tr><td>Truck</td><td>2</td><td>5</td></tr>
<tr><td>Compactors*</td><td>1</td><td>3</td></tr>
<tr><td>Pavers*</td><td>1</td><td>5</td></tr>
</table>
*Intermittent use
The increase in vehicular density during construction is not expected to be significant. Thus, no major impacts are anticipated on this account.</td></tr>
<tr><td>5.2</td><td>Emission from production processes</td><td>No</td><td>There is no production as the proposed project is Residential.</td></tr>
<tr><td>5.3</td><td>Emissions from materials handling including storage or transport</td><td>Yes</td><td>This will be restricted to the construction phase and construction site only. However, the generation of such emission will be very minimum.</td></tr>
<tr><td>5.4</td><td>Emissions from construction activities including plant and equipment</td><td>Yes</td><td>This will be restricted to the construction phase and to the construction site only. It will be minimized by water sprinklers.</td></tr>
<tr><td>5.5</td><td>Dust or odours from handling of materials including construction materials, sewage and waste</td><td>Yes</td><td>Dust is likely to be generated during construction, this will be water sprinkled and tarpaulin cover will be provided over stored raw material to reduce dust emission.
On site sanitation facilities will be provided for construction workers during construction.
As part of this project MBBR STP system shall be provided, in which there shall be good mixing of oxygen with the microorganisms which will lead to minimum odour generation.</td></tr>
<tr><td>5.6</td><td>Emissions from</td><td>No</td><td>Not Applicable</td></tr>
</table>

Sr. No.	Information/Checklist Confirmation	Yes/No	Details thereof (with approximate quantities/ rates, wherever possible) with source of information data
	incineration of waste		
5.7	Emissions from burning of waste in open air (e.g. slash materials, construction debris)	No	Open burning of biomass / other material will be prohibited.
5.8	Emissions from any other sources	No	Not Applicable

6. Generation of Noise and vibration, and emissions of Light and heat

Sr. No.	Information/Checklist Confirmation	Yes/No	Details thereof (with approximate quantities/ rates, wherever possible) with source of information data
6.1	From operation of equipment e.g. engines, ventilation plant, crushers	Yes	The machinery which will be used for construction will be of highest standard and reputed make and will adhere to international standard. Hence insignificant impacts due to construction machinery are envisaged. Source of noise in the operational phase will be DG sets and vehicular sources only. The DG sets will be in operation during power failure only. Moreover, the DG room shall be acoustically enclosed.
6.2	From industrial or similar processes	No	Not Applicable
6.3	From construction or demolition	Yes	The construction activities will include the following noise generating activities: ➢ Operation of DG sets, concreting and mixing ➢ Excavation etc. activities

Sr. No.	Information/Checklist Confirmation	Yes/No	Details thereof (with approximate quantities/ rates, wherever possible) with source of information data
			➢ Construction plant and heavy vehicle movement. It has been estimated that during this period the average noise level will be around 80-85 dB (A) during peak construction hours. During the process, the machinery shall be **acoustically enclosed** and workers shall be provided with protective gears.
6.4	From blasting or piling	No	No blasting or mechanized piling will be done in construction phase.
6.5	From construction or operational traffic	Yes	Some amount of noise will be generated from vehicular movement in the construction and operational phase.
6.6	From lighting or cooling systems	No	Not Applicable
6.7	From any other sources	No	Not Applicable

7. Risks of contamination of land or water from releases of pollutants into the ground or into sewers, surface waters, groundwater, coastal wasters or the sea

Sr. No.	Information/Checklist Confirmation	Yes/No	Details thereof (with approximate quantities/ rates, wherever possible) with source of information data
7.1	From handling, storage, use or spillage of hazardous materials	No	Spent oil will be handled with utmost care, it will be stored in HDPE drums stationed over concrete platforms and will be directly transferred to vendors authorized to handle such hazardous material.

Sr. No.	Information/Checklist Confirmation	Yes/No	Details thereof (with approximate quantities/ rates, wherever possible) with source of information data
7.2	From discharge of sewage or other effluents to water or the land (expected mode and place of discharge)	No	The total wastewater generated from the mall will be treated in STP and the treated water will be utilized for landscaping, AC make up and flushing purpose.
7.3	By deposition of pollutants emitted to air into the land or into water	No	No fresh water bodies are located in downward direction
7.4	From any other sources	No	Not envisaged.
7.5	Is there a risk of long term build up of pollutants in the environment from these sources?	No	Not envisaged.

8. Risk of accidents during construction or operation of the project, which could affect human health or the environment

Sr. No.	Information/Checklist Confirmation	Yes/No	Details thereof (with approximate quantities/ rates, wherever possible) with source of information data
8.1	From explosions, spillages, fires etc from storage, handling, use or production of hazardous substances	No	Not envisaged. The 'HSD' will be stored as per hazardous substance handling guidelines.
8.2	From any other causes	No	-
8.3	Could the project be affected by natural disasters causing environmental damage (e.g. floods, earthquakes, landslides, could burst etc)?	No	The project falls under seismic zone-III according to the Indian Standard Seismic Zoning Map. Further it is not flood prone or landslide prone areas. However suitable seismic coefficients in horizontal and vertical directions will be adopted while designing the structures. In case of any Natural disaster/accident-Emergency

Sr. No.	Information/Checklist Confirmation	Yes/No	Details thereof (with approximate quantities/ rates, wherever possible) with source of information data
			following Preparedness & Response plan will be in place • Emergency siren will be sounded • Systematic evacuation • Communication between incident controller & security officer will be done by walkie Talkie/Emergency telephone number

9. Factors which should be considered (such as consequential development) which could lead to environmental effects or the potential for cumulative impacts with other existing or planned activities in the locality.

Sr. No.	Information/Checklist Confirmation	Yes/No	Details thereof (with approximate quantities/ rates, wherever possible) with source of information data
9.1	Lead to development of supporting, utilities, ancillary development or development stimulated by the project which could have impact on the environment e.g.:	Yes	Supporting and ancillary development will take place.
	Supporting infrastructure (roads, power supply, waste or waste water treatment, etc)	Yes	Internal Roads, Rainwater Harvesting, STP etc will be provided.
	Housing development	Yes	

Sr. No.	Information/Checklist Confirmation	Yes/No	Details thereof (with approximate quantities/ rates, wherever possible) with source of information data
	Extractive industries Supply industries Other	No No	
9.2	Lead to after use of the site, which could have an impact on the environment	No	No significant impact envisaged. The domestic traffic is likely to increase.
9.3	Set a precedent for later developments	Yes	This may allow commercial & residential developments near the site.
9.4	Have cumulative effects due to proximity to other existing or planned projects with similar effects	No	Not envisaged.

(III) Environmental Sensitivity

Sr. No.	Areas	Name / Identity	Aerial distance (with 15-km) Proposed project location boundary
1	Areas protected under international conventions, national or local legislation for their ecological, landscape, cultural or other related value	No	Nil
2	Areas which are important or sensitive of ecological reasons – wetlands, water courses or other water bodies, coastal zone, biospheres, mountains, forests	Yes	Valankulam-7.5 Km Kulatheri-7.5 Km Vellalore Kulam-8.5 Km Selvampatti Eri-8.5 Km Periyakulam-9 Km Noyyal River-9 Km

<table>
<tr><th>Sr. No.</th><th>Areas</th><th>Name / Identity</th><th>Aerial distance (with 15-km) Proposed project location boundary</th></tr>
<tr><td>3</td><td>Areas used by protected, important or sensitive species of flora or fauna for breeding, nesting, foraging, resting, over wintering, migration</td><td>No</td><td>Nil</td></tr>
<tr><td>4</td><td>Inland, coastal, marine or underground waters</td><td>No</td><td>Nil</td></tr>
<tr><td>5</td><td>State, national boundaries</td><td>No</td><td>Nil</td></tr>
<tr><td>6</td><td>Routes or facilities used by the public for access to recreation or other tourist, pilgrim areas</td><td>No</td><td>Nil</td></tr>
<tr><td>7</td><td>Defense installations</td><td>No</td><td>Nil</td></tr>
<tr><td>8</td><td>Densely populated or built-up area</td><td>Yes</td><td>Ganapathy-1 Km
Saravanampatti – 2 Km
Chinnavedampatti-500 m
Kavundampalayam East-3.5 Km
Thudiyalur-5.5 Km
Vadamadurai- 7 Km
Peelamedu-2 Km</td></tr>
<tr><td>9</td><td>Areas occupied by sensitive man made land uses (hospitals, schools, places of worship, community facilities)</td><td>Yes</td><td>
<table>
<tr><th>S.No</th><th>Place</th><th>Dist. From Project site</th></tr>
<tr><td colspan="3">Schools & Colleges</td></tr>
<tr><td>1</td><td>APG Matriculation Higher Secondary School</td><td>1.4 Km</td></tr>
<tr><td>2</td><td>Vidya Niketan School</td><td>2.6Km</td></tr>
<tr><td>3</td><td>PSG College of Arts & Science</td><td>5.4 Km</td></tr>
<tr><td>4</td><td>Government College of Technology</td><td>6.5 Km</td></tr>
<tr><td>5</td><td>Kumaraguru College of Technology</td><td>2.5Km</td></tr>
</table>
</td></tr>
</table>

<table>
<tr><th>Sr. No.</th><th>Areas</th><th>Name / Identity</th><th>Aerial distance (with 15-km) Proposed project location boundary</th></tr>
<tr><td></td><td></td><td></td><td>
<table>
<tr><th colspan="3">Hospitals</th></tr>
<tr><td>1</td><td>Sankara Eye Hospital</td><td>300 m</td></tr>
<tr><td>2</td><td>Indian Ayurvedic Hospital & Research Centre</td><td>400 m</td></tr>
<tr><td>3</td><td>Coimbatore Government Hospital</td><td>7 Km</td></tr>
<tr><th colspan="3">Common Places</th></tr>
<tr><td>1</td><td>Regional Science Centre & Planetarium</td><td>5 Km</td></tr>
<tr><td>2</td><td>Coimbatore Central Jail</td><td>5.2 Km</td></tr>
<tr><td>3</td><td>Coimbatore Airport</td><td>6 Km</td></tr>
<tr><td>4</td><td>Coimbatore Railway station</td><td>7 Km</td></tr>
<tr><td>5</td><td>Peelamedu Railway station</td><td>2.5 Km</td></tr>
</table>
</td></tr>
<tr><td>10</td><td>Areas containing important, high quality or scarce resources (ground water resource, surface resources, forestry, agriculture, fisheries, tourism, minerals)</td><td>No</td><td>Not located</td></tr>
<tr><td>11</td><td>Areas already subjected to pollution or environmental damage. (those where existing legal environmental standards are exceeded)</td><td>Yes</td><td>Kurichi Industrial Cluster- 12 Km</td></tr>
<tr><td>12</td><td>Areas susceptible to natural hazard which could cause the project to present environmental problems (earthquakes, subsidence, landslides, erosion, flooding or extreme or adverse climatic conditions)</td><td>No</td><td>This area is generally plain not prone to any natural disasters. The area under study falls in Zone-III, according to the Indian Standard Seismic Zoning Map. Suitable seismic coefficients in horizontal and vertical directions respectively, have to be adopted while designing the structures.</td></tr>
</table>

(IV) Proposed Terms of Reference

Not Applicable

I hereby given undertaking that the data and the information given in the application and enclosures are true to the best of my knowledge and belief and I am aware that if any part of the data and information submitted is found to be false or misleading at any stage, the project will be rejected and clearance give, if any to the project will be revoked at our risk and cost.

Date:

Place:

Signature of the applicant

With Name and full address

(Project proponent / Authorized signatory)

APPENDIX II

FORM-1A

(Only for construction projects listed under item 8 of the Schedule)

1 LAND ENVIRONMENT

1.1 Will the existing land use get significantly altered from the project that is not consistent with the surroundings?(proposed land use must conform to the approved master plan/ development plan of the area. change of land use if any and the statutory approval from the competent authority be submitted). Attach maps of (i) site location, (ii) surrounding features of the proposed site (within 500 meters) and (iii) the site (indicating levels & contours) to appropriate scales. If not available attach only conceptual plans.

Project Site Location

The proposed site is located in Saravanampatti Village, Coimbatore North Taluk, Coimbatore District of Tamil Nadu State.

Proposed Guest House and Residential development falls in Survey No. SF 200, SF 206, SF 205/2 which has been converted to commercial from industrial use zone. Relevant maps and other documents are attached in annexure; the details are shown in the table below.

S.No	List of Annexure	Details
1.	**Annexure 2**	Gazette Notification
2.	**Annexure-6**	DTCP communication for development of mall
3.	**Annexure 7**	Topo Plan
4.	**Annexure 8**	Satellite Image of site and Surrounding features
5.	**Annexure 9**	Site plan
6.	**Annexure 10**	Contour map of site

1.2 List out all the major project requirements in terms of the land area, built up area, water consumption, power requirement, connectivity, community facilities, parking needs etc.

Item	Details
Project Name	**Mall** (Mall, Multiplex, Restaurant, Food Court)**, Guest House & Residential development**
Location	Saravanampatti Village, SF199/1, 200, 201, 206, 205/2

<table>
<tr><th>Item</th><th>Details</th></tr>
<tr><td>Type of project</td><td>Mall (Mall, Multiplex, Restaurant, Food Court), Guest House & Residential development</td></tr>
<tr><td>Total Plot Area</td><td>99552.65 sq. mt.</td></tr>
<tr><td>Built up area</td><td>
<table>
<tr><th>Particulars</th><th>Existing</th><th>Proposed</th><th>Total</th></tr>
<tr><td>Built up</td><td>67557.07 sq mt</td><td>64512.01 sq mt (Resi+ Guest house)</td><td>1,32,069.08 sq mt</td></tr>
</table>
FSI and Non FSI Area Breakup of proposed Guest House & Residential is enclosed in Annexure-11
</td></tr>
<tr><td>Ground coverage</td><td>
<table>
<tr><td>Particulars</td><td>Existing (Sq.m)</td><td>Proposed (Sq.m)</td><td>Total (Sq.m)</td></tr>
<tr><td>Ground Coverage</td><td>27390.12</td><td>5033.11+1279.87</td><td>33703.10</td></tr>
</table>
</td></tr>
<tr><td>Road & pavements</td><td>
<table>
<tr><td>Particulars</td><td>Existing (Sq.m)</td><td>Proposed (Sq.m)</td><td>Total (Sq.m)</td></tr>
<tr><td>Road & pavements</td><td>9451.66</td><td>8325</td><td>17776.66</td></tr>
</table>
</td></tr>
<tr><td>Green Belt</td><td>
<table>
<tr><td>Particulars</td><td>Existing (Sq.m)</td><td>Proposed (Sq.m)</td><td>Total (Sq.m)</td></tr>
<tr><td>Green Belt</td><td>16,946.92</td><td>5,251.67</td><td>22,198.59</td></tr>
</table>
</td></tr>
<tr><td>OSR Area</td><td>
<table>
<tr><td>Particulars</td><td>Existing (Sq.m)</td><td>Proposed (Sq.m)</td><td>Total (Sq.m)</td></tr>
<tr><td>OSR Area</td><td>6,459.08</td><td>3,496.18</td><td>9,955.26</td></tr>
</table>
</td></tr>
<tr><td>Surface Parking Area</td><td>
<table>
<tr><td>Particulars</td><td>Existing (Sq.m)</td><td>Proposed (Sq.m)</td><td>Total (Sq.m)</td></tr>
<tr><td>Surface Parking</td><td>2767.33</td><td>1525.03</td><td>4292.36</td></tr>
</table>
</td></tr>
<tr><td>Future development area</td><td>
<table>
<tr><td>Particulars</td><td>Existing (Sq.m)</td><td>Proposed (Sq.m)</td><td>Total (Sq.m)</td></tr>
<tr><td>Future development area</td><td>-</td><td>16500</td><td>16500</td></tr>
</table>
</td></tr>
<tr><td>Number of Blocks/floors</td><td>Tower A (EWS)–Basement + Stilt + 18 floors + Terrace
Tower B – Basement+ Stilt + 18 floors + Terrace
Tower C –Basement+ Stilt + 18 floors + Terrace
Guest House – Ground floor</td></tr>
</table>

<table>
<tr><td>Item</td><td>Details</td></tr>
<tr><td>No. of. Units:</td><td>
<table>
<tr><td>Type</td><td>Tower A (EWS)</td><td>Tower B</td><td>Tower C</td></tr>
<tr><td>1 BHK</td><td>216</td><td></td><td></td></tr>
<tr><td>2 BHK</td><td>-</td><td>72</td><td>108</td></tr>
<tr><td>3 BHK</td><td>-</td><td>72</td><td>72</td></tr>
<tr><td>Total No. of Units</td><td>216</td><td>144</td><td>180</td></tr>
</table>
Total no. of Dwelling Units – 540 nos. including 216 units of EWS.
</td></tr>
<tr><td>-Building Height</td><td>59.80mt</td></tr>
<tr><td>Road Width</td><td>Approach road 30m (NH 209)</td></tr>
<tr><td>Parking facilities for Guest House & Residential Development:</td><td>
<table>
<tr><td rowspan="2">S.No</td><td rowspan="2">Floor</td><td colspan="2">Cars</td><td colspan="2">Two Wheelers</td></tr>
<tr><td>Nos.</td><td>Area (m2)</td><td>Nos.</td><td>Area (m2)</td></tr>
<tr><td>1</td><td>Basement</td><td>126</td><td>1575</td><td>183</td><td>329</td></tr>
<tr><td>2</td><td>Stilt</td><td>117</td><td>1462.5</td><td>171</td><td>308</td></tr>
<tr><td>3</td><td>Surface</td><td>122</td><td>1525</td><td>-</td><td></td></tr>
<tr><td colspan="2">Total</td><td>355</td><td>4562.5</td><td>354</td><td>637</td></tr>
</table>
</td></tr>
<tr><td>Parking facilities for mall:</td><td>Car Parking- 1100nos</td></tr>
<tr><td>Power requirement</td><td>
<table>
<tr><td>Particulars</td><td>Existing</td><td>Proposed</td></tr>
<tr><td>Connected Load</td><td>8864 KVA</td><td>9525 KVA</td></tr>
<tr><td>Demand Load</td><td>4464 KVA</td><td>3232 KVA</td></tr>
</table>
</td></tr>
<tr><td>Source of power</td><td>TNEB</td></tr>
<tr><td>Power backup</td><td>
<table>
<tr><td>Particulars</td><td>Existing</td><td>Proposed</td></tr>
<tr><td>DG Set</td><td>2 x 1500 KVA</td><td>1x400 KVA</td></tr>
</table>
</td></tr>
<tr><td>Water requirement</td><td>
<table>
<tr><td>Particulars</td><td>Existing</td><td>Proposed</td><td>Total</td></tr>
<tr><td>Total Water Requirement</td><td>196 KLD</td><td>410 KLD</td><td>606 KLD</td></tr>
<tr><td>Fresh Water</td><td>36 KLD</td><td>261 KLD</td><td>297 KLD</td></tr>
<tr><td>Recycled Water</td><td>160 KLD</td><td>149 KLD</td><td>309 KLD</td></tr>
</table>
</td></tr>
</table>

<table>
<tr><th>Item</th><th>Details</th></tr>
<tr><td>Water Source</td><td>Municipality/ Ground</td></tr>
<tr><td>Estimated population to step-in</td><td>
<table>
<tr><td>Particulars</td><td>Existing</td><td>Proposed</td><td>Total</td></tr>
<tr><td>Permanent</td><td>0</td><td>2700</td><td>2700</td></tr>
<tr><td>Temporary</td><td>11000</td><td>200</td><td>11200</td></tr>
</table>
</td></tr>
<tr><td>Project cost</td><td>
<table>
<tr><td>Particulars</td><td>Existing</td><td>Proposed</td><td>Total</td></tr>
<tr><td>Project Cost</td><td>Rs 190 Cr</td><td>Rs 87 Cr</td><td>Rs 277 Cr</td></tr>
</table>
</td></tr>
<tr><td>Connectivity</td><td>NH 209</td></tr>
</table>

1.3 What are the likely impacts of the proposed activity on the existing facilities adjacent to the proposed site? (Such as open spaces, community facilities, details of the existing land use, disturbance to the local ecology)

The proposed activity will improve the basic infrastructure facilities of the area.
The proposed development of residential unit shall be carried out as per the defined building by-laws of Coimbatore Municipal Corporation. Hence no such negative impact is envisaged on the existing facilities adjacent to the proposed site.

The operation of project and other allied facilities will provide direct and indirect employment opportunities for a large section of society. The employment will have positive impact thereby increasing the quality of life.

1.4 Will there be any significant land disturbance resulting in erosion, subsidence & instability? (Details of soil type, slope analysis, vulnerability to subsidence, seismicity etc. may be given).

The existing terrain is retained. Cutting and filling is required. No land disturbance resulting in erosion, subsidence & instability is anticipated. Proper greening & paving of area will help in preventing soil erosion problem and subsidence.
The area under study falls in Zone-III, according to the Indian Standard Seismic Zoning Map. Suitable seismic coefficients in horizontal and vertical directions respectively, will be adopted while designing the structures to mitigate the seismic impacts.

1.5 Will the proposal involve alteration of natural drainage systems? (Give details on a contour map showing the natural drainage near the proposed project site)

There will be no alteration to natural drainage system and there will be a well planned storm water drain network. The contour of the project site is enclosed as **Annexure –10.**

1.6 What are the quantities of earthwork involved in the construction activity cutting, filling, reclamation etc. (Give details of the quantities of earthwork involved, transport of fill materials from outside the site etc.)

Around 32,770 m^3 of soil will be excavated for the proposed Guest House & Residential Development construction.

This excavated soil will be properly stacked within the site under tarpaulin cover; and will be reused for backfilling purpose, road construction etc. The top-soil will be preserved separately and will be used for landscaping purpose only. Hence, no immediate adverse impacts on the land environment are envisaged.

1.7 Give details regarding water supply, waste handling etc. during the construction period.

The water requirement during construction phase is 143 KLD, which will be sourced from ground water & tankers.

Particulars	Existing	Proposed	Total
Water requirement during Construction	109 KLD	143 KLD	252 KLD

The construction debris will be recycled to the maximum possible and the wastes will be disposed through authorized vendors.

Waste Handling:

- Soil excavated will be reused for backfilling and the fertile topsoil will be reused for horticultural purpose.
- Excess soil will be used for road construction and will be dumped at the designated site.
- For spillage of oil from the machinery, the oil (lubricating oil or fuel) is collected in a tray kept especially for this purpose and it can be reused. If possible filtration can also be done.
- For cement residual from concrete mixer plants, it is discharged into the Mixing Drum from the soil through air tight pipeline. This minimizes the chances of pollution, and is also a space saving affair.

- For construction workers, toilets will be provided with septic tank and soak pits for sewerage treatment purpose. Wash areas and drinking water areas will be provided.
- Solid waste generated from the site (25 Kg/day) will be collected, segregated and disposed at municipal solid waste collection sites.

1.8 Will the low-lying areas & wetlands get altered? (Provide details of how low lying and wetlands are getting modified from the proposed activity)

There will be no alteration to natural drainage system/low lying area/wetland and there will be a well-planned storm water drain network.

1.9 Whether construction debris & waste during construction cause health hazard? (Give quantities of various types of wastes generated during construction including the construction labors and the means of disposal)

The construction debris will be segregated viz., steel, metal, plastics, papers etc. Maximum effort will be taken to recycle the wastes and other wastes will be sold to scrap dealers. There will not be any health hazard due to this debris. Approximately 25 Kg/ day municipal solid waste will be generated, which will be disposed at the solid waste collection sites.

2 WATER ENVIRONMENT

2.1 Give the total quantity of water requirement for the proposed project with the breakup of requirements for various uses. How will the water requirement met? State the sources & quantities and furnish a water balance statement.

The daily requirement of water will be 410KLD. Fresh water demand is 261 KLD. After treatment of wastewater, treated water will be reused for flushing, & green belt. The source of water is from municipality and ground water. Water balance is enclosed as **Annexure-3**

Particulars	Existing	Proposed	Total
Total Water Demand	196 KLD	410 KLD	606 KLD
Fresh Water Demand	36 KLD	261 KLD	297 KLD
Recycled Water	160 KLD	149 KLD	309 KLD

The sewage generated during the operation phase will be treated up to the tertiary level in a Sewage Treatment Plant (STP). The sewage of 330 KLD will be treated in separate STPs and recycled/ reused for toilet flushing and gardening.

2.2 What is the capacity (dependable flow or yield) of the proposed source of water?

Fresh water demand for the proposed residential project has been calculated to be about 261 KLD. During operational phase, water will be primarily sourced TWAD/ ground water.

2.3 What is the quality of water required, in case, the supply is not from a municipal source? (Provide physical, chemical, biological characteristics with class of water quality)

Water from municipal supply/ ground water will be used.

2.4 How much of the water requirement can be met from the recycling of treated wastewater? (Give the details of quantities, sources and usage)

Total water requirement 410KLD will be met from the recycling of treated sewage for toilet flushing. The total quantity of water reused is 149KLD.

Particulars	Existing	Proposed
Quantity of water reused	160 KLD	149 KLD

2.5 Will there be diversion of water from other users? (Please assess the impacts of the project on other existing uses and quantities of consumption)

There will not be any diversion of water from the other users.

2.6 What is the incremental pollution load from wastewater generated from the proposed activity? (Give details of the quantities and composition of wastewater generated from the proposed activity)

During operation, 330 KLD of wastewater will be generated which will be treated in the sewage treatment plant and part of the treated sewage will be utilized for flushing, gardening. The expected characteristics of wastewater and treated wastewater are as given below:

Characteristics of Treated Water

Parameter	Expected Wastewater Characteristics	Treated Wastewater Characteristics

pH	7.5-8.5	7 - 7.5
BOD	300-400mg/lit	Less than 30 mg / lit
COD	500 mg / lit	Less than 100 mg / lit
Suspended Soils	300 mg/lit	Less than 10 mg / lit
Oil & Grease	15 mg /lit	Less than 5 mg / lit

2.7 Give details of the water requirements met from water harvesting? Furnish details of the facilities created.

Rain water from roof tops will be drained through rain water vertical down take pipes. These vertical down take pipes shall be located at suitable locations inside the shafts or periphery of the building. The terrace will be sloped. The down take pipes will be connected to the rainwater collection tank located at Lower Ground for storage purpose. The collected rain water will be utilized during rainy season as a source after proper treatment. Rainwater harvesting calculation is given in **Annexure 12** and section showing the rainwater harvesting schematic and the location of rain water collection tank is enclosed in **Annexure 13**

2.8 What would be the impact of the land use changes occurring due to the proposed project on the runoff characteristics (quantitative as well as qualitative) of the area in the post construction phase on a long-term basis? Would it aggravate the problems of flooding or water logging in any way?

No adverse impacts are envisaged due to proposed project on the runoff characteristics of the area as adequate arrangements have been made to trap the rainwater and suitable storm water drainage system has been provided. During the post-construction phase, runoff from the project shall not be allowed to stand or enter into the roadside or nearby drain. Adequate measures shall be taken to collect such run off and directed to recharging pits.

2.9 What are the impacts of the proposal on the ground water? (Will there be tapping of ground water; give the details of ground water table, recharging capacity, and approvals obtained from competent authority, if any)

Water will be met from Municipal source for drinking and ground water for other domestic use. NOC from CGWB is enclosed in **Annexure-5**. Recharging of ground water is also proposed for this project.

2.10 What precautions/measures are taken to prevent the run-off from construction activities polluting land & aquifers? (Give details of quantities and the measures taken to avoid the adverse impacts)

No runoff will be disposed outside the project site.

2.11 How is the storm water from within the site managed? (state the provisions made to avoid flooding of the area, details of the drainage facilities provided along with a site layout indication contour levels)

The storm water from the site is collected by means of storm water drainage network. It is proposed to provide 7 bore well recharge pits for management of storm water, bore well pits will be of 3 m dia borehole and 10 m depth as per site condition. Boreholes are made with casing pipes in position, and then filled up with 23" dia riverside pebble and then casing pipe is removed. The pit outer wall is constructed in Geo textile on PCC bed of 1:4:8 ratios. The first layer for 3" thick is filled with jelly stone of size 1" – 3". The second layer for 6" thick is filled with course sand. The third layer for 11" thick is filled with jelly stone. The fourth layer for 30" thick is filled with boulders. The fifth layer for 43" thick in filled with riverside pebble, of ¾ "- 1". Finally the top of pit is covered with precast perforated slab with perforation of (min) 600 mm dia in strip of size 2'0' wide, to allow entry of surface / ground level rainwater. The excess runoff will be connected to the existing storm water drainage system. The details of storm water drainage plan enclosed as **Annexure- 13.**

2.12 Will the deployment of construction laborers particularly in the peak period lead to unsanitary conditions around the project site (Justify with proper explanation)

No, the deployment of construction workers will not lead to unsanitary conditions at project site. Proper sanitary facilities will be provided to construction workers and treatment of the sewage will be done using septic tank and soak pits.

2.13 What on-site facilities are provided for the collection, treatment & safe disposal of sewage? (Give details of the quantities of wastewater generation, treatment capacities with technology & facilities for recycling and disposal)

<u>Sewage Treatment and Reuse:</u>

The details of quantity of sewage, sewage collection, treatment, reuse and disposal are given in the Table below. The design parameters, process description and schematic flow diagram of the STP is given in **Annexure -14.**

The location of STP, flushing line from STP and treated water line to garden is enclosed as **Annexure- 15**

Sewage Quantity, Treatment, Reuse & Disposal

Quantity of sewage	330KLD
STP Capacity	390 KLD
Collection of sewage	Sewage generated during the operation phase will be collected through underground sewerage system (pipe drain) for treatment in STP.
Treatment of sewage	Sewage will be treated up to the tertiary level in a Sewage Treatment Plant based on Activated sludge process. The secondary treated sewage will be treated **in UV and UF plant.**
Reuse / recycle of treated sewage	Out of 330 KLD of treated sewage, 243 KLD recycled for toilet flushing, excess treated sewage will be given to RMC builders or Municipal drain.

2.14 Give details of dual plumbing system if treated waste is used for flushing of toilets or any other use.

A separate tank of is provided to store treated sewage for flushing and will be connected to the toilet flushing of the building.

3 VEGETATION

3.1 Is there any threat of the project to the biodiversity? (Give a description of the local ecosystem with its unique features, if any)

There is no biodiversity threat as the major land use is uncultivated lands with sparse bush vegetation.

3.2 Will the construction involve extensive clearing or modification of vegetation? (Provide a detailed account of the trees & vegetation affected by the project)

Very few wild shrubs are present which have to be cleared. There will be no cutting of trees involved for the proposed project.

3.3 What are the measures proposed to be taken to minimize the likely impacts on important site features (Give details of proposal for tree plantation, landscaping, creation of water bodies etc along with a layout plan to an appropriate scale)

It is proposed to have tree plantation along the periphery of the site and also to develop lawn and greenery inside the project area. The landscape plan is enclosed as **Annexure- 16**. The vegetation for the greenbelt will be selected from the native species adapted to the local environment.

Particulars	**Existing**	**Proposed**	**Total**
Green Belt	16,946.92 sq.m	5,251.67 sq.m	22,198.59 Sq.m
OSR Area	6459.08 sq.m	3496.18 sq.m	9,955.26 Sq.m
Total OSR + Green Belt Area	23,406 sq.m	8747.85 sq.m	32,153.85 sq.m

Landscaping has been taken care of in view of the environment and aesthetics of the surrounding areas. Stress has been laid on providing ample green areas in close conjugation to the hard areas in a manner, that the overall harmony and ambience is maintained. Landscaping takes into account the various aspects of the architectural design. Trees are proposed to be planted to form an integral part of the landscape plantation and their selection is based on their ability to provide shade, flowers and fragrance apart from their high-yielding growth pattern. The addition of shrubs, hedges and ground cover will add to the aesthetics and softness to the hard building surfaces.

Swimming pool is proposed near guest house and the makeup water requirement for swimming pool is 5 KLD.

Swimming pool Details

S.No	**Pool**	**Area**	**Volume of water (m^3)**
1	Main pool	218 Sqm	262
2	Kids pool	40 Sqm	30
3	Tot pool	16.5 Sqm	6.6
4	Leisure pool	8.5 Sqm	5.3
5	Leisure pool	8.5 Sqm	5.3
6	SPA pool	9.5 Sqm	8.5
7	Balancing tank		16
Total Water Requirement			**334**

The swimming pool treatment design is given in **Annexure- 17**

4 FAUNA

4.1 Is there likely to be any displacement of fauna- both terrestrial and aquatic or creation of barriers for their movement? Provide the details.

The proposed site is an open land surrounded by residential areas and devoid of forest or major aquatic body, so in existing conditions, this place is not the habitat for local fauna. Hence, there will not be any type of displacement or any other effect on the local fauna due to proposed project activities.

4.2 Any direct or indirect impacts on the avifauna of the area? Provide details.

Within the proposed project site, green areas will be developed to achieve a blend between modern building and various species of plants to create a clean, healthy and aesthetic environment. Common native variety of trees and ornamental flowering species will be planted in the green space. Landscaping can have direct positive impact on the local avifauna, as this will provide shelter to local birds.

4.3 Prescribe measures such as corridors, fish ladders etc. to mitigate adverse impacts on fauna.

These measures are not applicable for the proposed project.

5 AIR ENVIRONMENT

5.1 Will the project increase atmospheric concentration of gases & result in heat islands? (Give details of background air quality levels with predicted values based on dispersion models taking into account the increased traffic generation as a result of the proposed constructions)

The marginal increase in traffic due to project is not going to cause any significant increase in atmospheric concentration of gases and will not result in heat island formation. To assess the background ambient air quality, ambient air quality monitoring has been conducted at 2 locations in and around the project site. The results are summarized in the Table below.

Summary of Ambient Air Quality in the Study Area

S. No.	Parameter	Min	Max	Mean	Standard for Res. & Rural Area
1	PM_{10}	60.5	82.7	75.4	< 100 μg/m^3
2	$PM_{2.5}$	28.7	41.3	34.5	< 60 μg/m^3
3	Sulphur dioxide (SO_2) (μg/m^3)	8.3	12.7	10.4	< 80 μg/m^3
4	Oxides of nitrogen (NO_2) (μg/m^3)	16.5	20.6	18.7	< 80 μg/m^3

From the monitoring results it is clear that, though the 24-hourly average levels of SO_2 and NO_2 were observed to be within the limit of 80 μg/m^3 for residential, rural & other areas as stipulated in the National Ambient Air Quality Standards. The PM_{10} as well as $PM_{2.5}$ levels were well within the permissible limit of 100 μg/m3 and 60 μg/m^3 respectively.

5.2 What are the impacts on generation of dust, smoke, odorous fumes or other hazardous gases? Give details in relation to all the meteorological parameters.

No impacts are envisaged as the proposed project is construction of mall, as no smoke, odor or hazards gases will be generated from this project.

Mitigation measures for dust:

- All fine earth materials must be covered during transportation to the site to prevent spillage and dusting. Trucks used for that purpose on the project should be fitted with tailgates that close properly and with tarpaulins to cover the materials.
- The transportation of lubricants and fuel to the site should only be done in the appropriate vehicles and containers, i.e. fuel tankers and sealed drums.
- As far as possible, transport of construction materials should be scheduled for off-peak traffic hours. This will reduce the risk of traffic congestion and of road accidents on the access roads to the site.
- All loose material either stocked or transported shall be provided with suitable covering such as tarpaulin, etc.
- Water sprinkling shall be done at the location where dust generation is anticipated.
- Over Burden (OB) waste dumps shall be sprayed with water as they are major sources of air borne particulate matter/dust.
- OB waste dumps shall be reclaimed / afforested to bind the loose soil and to prevent soil erosion.

5.3 Will the proposal create shortage of parking space for vehicles? Furnish details of the present level of transport infrastructure and measures proposed for improvement including the traffic management at the entry & exit to the project site.

Adequate parking is provided for smooth movement of vehicles within the site.

Proposed Parking Facilities:

Residential

S.No	Floor	Cars		Two Wheelers	
		Nos.	Area (m2)	Nos.	Area (m2)
1	Basement	126	1575	183	329
2	Stilt	117	1462.5	171	308
3	Surface	122	1525	-	
Total		355	4562.5	354	637

Mall

Car Parking – 1100 nos

Two Wheeler – 56 nos

Traffic Management Plan at the Entry & Exit to the Project Site:

The Project will have access through NH 209 with an approach road of 30mts. Internal roads of 7.2 m wide will be provided within the site for smooth movement of vehicles. The traffic circulation plan showing the entry and exit and the internal circulation is given as **Annexure 18.**

5.4 Provide details of the movement patterns with internal roads, bicycle tracks, pedestrian pathways, footpaths etc., with areas under each category.

The internal roads, pedestrian pathways, entry/ exits and traffic circulation plan have been shown in the traffic circulation plan enclosed. In the circulation plan of the project, there will be proper entry and exit points for systematic control of the vehicular movement within the site.

5.5 Will there be significant increase in traffic noise & vibrations? Give details of the sources and the measures proposed for mitigation of the above.

There will be permanent influx of 2700 people due to the proposed project, so there will be marginal increase in traffic on the adjacent road that will have marginal increase in noise and vibrations. Major source of noise would be the vehicular movement.

Traffic Management Measures

1. All the vehicles will be performed only in left traffic entry of (project).
2. Smooth entry and exit of vehicle, bell mouth geometry is provided at the entry and ensure smooth transition for merging of vehicles.
3. Reflected jacket and Yellow color paint junction boxes are painted at the parking locations for drivers to control the speed.
4. Rubber humps are introduced for the outgoing vehicles at the gate exit drive way with in 3 m from the gate.
5. Security will guide the vehicles
6. Proper footpath provided for pedestrian movement along with interlocking and barricaded for safety.
7. Solar blinking lights used at the gate to caution the vehicle movements.
8. Safety precautionary measures are ensured for the safety of constructions labors which are working in the site during construction.
9. Lighting will be providing as per IRC.
10. Marking of road, stop line, parking lanes, slot numbers will painted so as guide the drivers.

Particulars	Existing	Proposed	Total
Permanent Influx	0	2700	2700
Temporary Influx	11000	200	11200

5.6 What will be the impact of DG sets & other equipment on noise levels & vibration in & ambient air quality around the project site? Provide details.

<u>Impacts on Air Quality</u>

Impacts on ambient air quality during operation due to emissions from the stacks attached to standby DG sets during power failure would be very minimum. DG will be provided with adequate stack height , so that there will be dispersion of smoke. Also the DG will be acoustically enclosed to minimize noise levels.

Mitigation Measures for Impacts of DG Sets on Ambient Air Quality:

- Back up DG sets will compile the applicable emission norms.
- Adequate stack height for DG sets will be provided as per norms.
- Back up DG sets will be used only during power failure.
- During operation stage, monitoring of emissions from DG sets and ambient air quality will be carried out as per norms.

6 AESTHETICS

6.1 Will the proposed constructions in any way result in the obstruction of a view, scenic amenity or landscapes? Are these considerations taken into account by the proponents?

As the proposed site does not have any scenic amenity or landscaping in its surroundings so there is no issue of obstruction of above-mentioned conditions. Moreover the approval of the architectural plan of the building will be taken from local development authority.

6.2 Will there be any adverse impacts from new constructions on the existing structures? What are the considerations taken into account?

The changes in sub surface structure will be localized and will only be restricted to the construction phase of the project.

6.3 Whether there are any local considerations of urban form & urban design influencing the design criteria? They may be explicitly spelt out.

The architectural plan of the building will confirm with the DTCP norms.

6.4 Are there any anthropological or archaeological sites or artifacts nearby? State if any other significant features in the vicinity of the proposed site have been considered.

No such sites are located in the vicinity.

7 SOCIO-ECONOMIC ASPECTS

7.1 Will the proposal result in any changes to the demographic structure of local population? Provide the details.

There will be permanent influx of 2700 numbers of people upon completion of the project. Since the project is proposed residential development, this will result in

addition of people for ancillary workers viz., watchmen, electrician, plumber, vegetable/ fruits seller, commercial/ fancy, Business etc.

7.2 Give details of the existing social infrastructure around the proposed project.

The project site is located in the development area under DTCP. The ancillary infrastructures like roads, markets, public health, amenities, and conveyance facilities are well developed in the project area. All social infrastructures like transportation facilities, water supply & sanitation facilities, communication facilities, educational institutions, hospitals, markets, banks, cultural amenities etc. already exist in the vicinity.

7.3 Will the project cause adverse effects on local communities, disturbance to sacred sites or other cultural values? What are the safeguards proposed?

The proposed construction will not have adverse effects on local communities. Since the project related activities are confined within the premises, no adverse impacts on surrounding features are envisaged.

8 BUILDING MATERIALS

8.1 May involve the use of building materials with high-embodied energy. Are the construction materials produced with energy efficient processes? (Give details of energy conservation measures in the selection of building materials and their energy efficiency)

Conventional construction material will be used. Energy efficient building materials will be used as specified in the Energy Conservation Building Code.

8.2 Transport and handling of materials during construction may result in pollution, noise & public nuisance. What measures are taken to minimize the impacts? Mitigation Measures for Air Pollution during Construction Stage

Air Quality

Air Quality around the project site will have impact during construction stage. Various construction activities especially related to handling of loose material like to cause generation of fugitive dust, that adversely impact the air quality of the surrounding area of the project site. To minimize such impact following measures shall be taken:

- All the loose material either stacked or transport shall provide with suitable covering such as tarpaulin, etc.
- Water sprinkling shall be done at the location where dust generation is anticipated.
- To minimize the occupational health hazard, proper personal protective gears i.e. mask shall be provided to the workers who are engaged in dust generation activity.

Mitigation Measures for Noise Pollution during Construction Stage

During the construction stage, expected noise levels shall be in the range of 80-85 dB (A) which will decrease with increase in distance as per the Inverse Square Law. Administrative as well as engineering control of noise will be implemented.

- Isolation of noise generation sources and temporal differentiation of noise generating activities will ensure minimum noise at receiver's end.
- To prevent any occupational hazard, earmuff / earplug shall be given to the workers working around or operating plant and machinery emitting high noise levels.
- Use of plant or machinery emitting high noise shall not be allowed during night hour.
- Careful planning of machinery operation and scheduling of operations shall be done to minimize such impact.

8.3 Are recycled materials used in roads and structures? State the extent of savings achieved?

Waste from construction like excavated earth, iron rods etc. will be recycled as far as possible. 15 % of the construction materials will be saved by reusing the debris and clay which was excavated.

8.4 Give details of the methods of collection, segregation & disposal of the 8garbage generated during the operation phases of the project.

The details of solid wastes collection recycle and disposals are given in the Table below.

Solid Wastes Collection, Recycle & Disposal

<table>
<tr><td>Quantity of solid wastes</td><td>
<table>
<tr><th>Particulars</th><th>Existing</th><th>Proposed</th><th>Total</th></tr>
<tr><td>Organic</td><td>1786kg/day</td><td>392 kg/day</td><td>2178 kg/day</td></tr>
<tr><td>STP Sludge (used in manure)</td><td>17 kg/day</td><td>40 kg/day</td><td>57 kg/day</td></tr>
<tr><td>Inorganic</td><td>2183kg/day</td><td>914 kg/day</td><td>3097 kg/day</td></tr>
<tr><td>Total</td><td>3969kg/day</td><td>1306 kg/day</td><td>5275 kg/day</td></tr>
</table>
</td></tr>
<tr><td>Nature of solid wastes</td><td>Biodegradable waste: Waste vegetables, foods, sewage sludge etc.
Non Biodegradable waste: Plastics, polythene bags, glass etc.</td></tr>
<tr><td>Collection and disposal of solid wastes</td><td>The solid wastes generated will be segregated into Biodegradable and non biodegradable components and collected in separate bins. The organic biodegradable wastes (waste vegetables, foods etc.) will be composted and reused at site. Dewatered/ dried sludge from STP will be used as manure in horticulture.</td></tr>
<tr><td>Recycling of solid wastes</td><td>The non biodegradable wastes comprising recyclable materials, such as plastic, glass etc., will be sold by flat owners to prospective buyers.</td></tr>
<tr><td>Excavated earth</td><td>Around 32,770 m3 of soil will be excavated for the proposed construction of Guest House & Residential development.
This excavated soil will be properly stacked within the site under tarpaulin cover; and will be reused for backfilling purpose, road construction etc. The top-soil will be preserved separately and will be used for landscaping purpose only. Hence, no immediate adverse impacts on the land environment are envisaged.</td></tr>
</table>

9 CONSERVATION

9.1 Give details of the power requirements, source of supply, backup source etc. What is the energy consumption assumed per square foot of built-up area? How have you tried to minimize energy consumption?

The details of power requirement, source, backup power arrangement (i.e. generators) are given in the Table below.

Power Requirement, Source and Backup Arrangement

<table>
<tr><td>Power requirement</td><td>
<table>
<tr><td>Particulars</td><td>Existing</td><td>Proposed</td></tr>
<tr><td>Connected Load</td><td>8864 KVA</td><td>9525 KVA</td></tr>
<tr><td>Demand Load</td><td>4664 KVA</td><td>3232 KVA</td></tr>
</table>
</td></tr>
<tr><td>Source of power</td><td>TNEB</td></tr>
<tr><td>Backup power supply arrangement</td><td>
<table>
<tr><td>Particulars</td><td>Existing</td><td>Proposed</td></tr>
<tr><td>DG Sets</td><td>2 x 1500 KVA</td><td>1 x 400 KVA</td></tr>
</table>
1x400kVA DG sets for Residential Development will be provided for partial power backup in case of power failure. (Common area only)
</td></tr>
</table>

9.2 What type of, and capacity of, power back-up you plan to provide?

Details provided in Item 9.1.

9.3 What are the characteristics of the glass you plan to use? Provide specifications of its characteristics related to both short wave and long wave radiation?

- 5mm thick Saint Gobain ET 125 glass for window shutter with EPDM beading & gaskets. Aluminium powder coated sections.

9.4 What passive solar architectural features are being used in the building? Illustrate the applications made in the proposed project?

Solar energy will be used for street lighting and solar heaters.

9.5 Does the layout of streets & buildings maximize the potential for solar energy devices? Have you considered the use of street lighting, emergency lighting and solar hot water systems for use in the building complex? Substantiate with details?

Solar energy will be used for external lighting and since the proposed project is residential units, solar water heaters are proposed.

9.6 Is shading effectively used to reduce cooling/heating loads? What principles have been used to maximize the shading of walls on the east and the west and the roof? How much energy saving has been effected?

Depending upon the site condition/location, design has been made to maximize the shading of Walls on the East and West and the Roof. The building layout plan and section plan explain this point very clearly.

9.7 Do the structures use energy-efficient space conditioning, lighting and mechanical systems? Provide technical details. Provide details of the transformers and motor efficiencies, lighting intensity and air-conditioning load assumptions? Are you using CFC and HCFC free chillers? Provide specifications.

Not Applicable for residential projects.

9.8 What are the likely effects of the building activity in altering the micro-climates? Provide a self-assessment on the likely impacts of the proposed construction on creation of heat island & inversion effects?

The building will use energy efficient and environmental friendly designs that will control formulation of heat island effect. There will be also green cover at the site to reduce formation of heat island. Passive design concepts have been used to minimize energy consumption and maximize the energy efficiency.

9.9 What are the thermal characteristics of the building envelope? (a) roof; (b) external walls; and (c) fenestration? Give details of the material used and the U-values or the R values of the individual components.

The building form can affect the solar access of the building. The compactness of the building is measured using a ratio of surface area to volume. Roofs and opaque walls should comply with the maximum assembly U factor or the minimum insulation R-value as given in Table below

Sr. No.	Name of material	Thickness in mm	R value	U value in BTU/hr.sq.ft (^{0}F Temp. difference)
1	Glass	5mm	4.1	0.24
2	Block wall	200	2.15	0.46
2	Concrete Slab (floor)	150	2.32	0.43
4	Concrete slab (roof)	-	-	- TBC

9.10 What precautions & safety measures are proposed against fire hazards? Furnish details of emergency plans.

Adequate fire protection facilities will be installed including fire detectors, fire alarm and fire fighting system to guard the building against fires. All fire protection facilities are designed as per the latest National Building Code. The NOC obtained from Fire department for Mall is enclosed as **Annexure 19**

9.11 If you are using glass as wall material provides details and specifications including emissivity and thermal characteristics.

Glass will not be used as wall material, only will be used in fenestration.

9.12 What is the rate of air infiltration into the building? Provide details of how you are mitigating the effects of infiltration.

Adequate provisions are provided to mitigate the effects of air infiltration.

9.13 To what extent the non-conventional energy technologies are utilized in the overall energy consumption? Provide details of the renewable energy technologies used.

Following are the measures used for energy saving: -

- Energy efficient Lighting fixtures with electronic ballasts .
- LED light fixtures.
- VFD and APFC Panel on Lifts
- MBBR type STP with VFD
- CO sensors & VFD on Basement Ventilation Fans
- Solar lighting for external lighting
- Solar water heaters

Internal Flat Lighting									
Sr. no	Description	Total No. of Fixtures/Flat	No. of flourescent tube lights considered per flat	No. of incandescent bulbs considered per flat	No. of Flats	Details using 40W Conventional Tube Lights and 20W incandescent bulbs		Details using 25W Energy efficient T5 lights with Electronic Ballast and 9W CFL considered for this project for power saving	
						Lighting load/Flat	Lighting load for all flats	Lighting load/Flat	Lighting load for all flats
	Tower A								
1	1BHK Flats	9	5	4	216	280	60480	161	34776
2	2 BHK Flats	16	9	7	144	500	72000	288	41472
3	3 BHK Flats	21	11	10	180	640	115200	365	65700
	Total for Flats				**540**	**1420**	**247680**	**814**	**141948**

Common Areas							
Sr. no	Description	Area in Sq.ft	Details for Flourescent Tube Lights		Details with using LED lights considered for this peoject		No. of Fixtures
			Type of Light	Lighting load	Type of Light	Lighting load	
1	Basement Parking	54000	40 W	27000	20W	13500	675
2	Stilt Parking	44400	40 W	22200	20W	11100	555
3	Staircases	29513	40 W	8400	5W	1050	210
4	Passage	56124	40 W	56120	15W	21045	1403
TOTAL		**184037**		**113720**		**46695**	**2843**

For Flats (Considering 60% diversity)			
Total Lighting Load using conventional lights	149	kW	
Total Lighting Load using power saving lights	85	kW	
Consumption per day using conventional lights (@ 8 hours)	1189	kW /day	
Consumption per day using power saving lights (@ 8 hours)	681	kW /day	**Note:** For Internal flat lighting, we have considered the Energy efficient Lighting fixtures to be used with electronic ballasts against conventional flouroscent tube lights with conventional ballasts. This will save upto 50% of energy utilised for light fixtures. For Common areas we have considered LED light fixtures against conventional T5 light fittings.
For Common Areas			
Total Lighting Load using flourescent lights	114	kW	
Total Lighting Load using LED lights	47	kW	
Consumption per day using flourescent lights (@ 12 hous)	1365	kW /day	
Consumption per day using LED lights (@ 12 hous)	560	kW /day	

Power saving by using VFD and APFC Panel on Lifts						
Sr. no	Description	TCL in kW	MD using in conventional Lifts	Power consumption per day in kWH (@ 3 hr.)	MD using Lifts with VFD and APFC panel	Power consumption per day in kWH
1	Lifts	180	108	324	75.6	226.8

Power saving by using VFD and APFC Panel on Water Pumps with 90% Efficiency						
	Using Water pumps with 60 % Effeiciency			Using VFD and APFC Panel on Water Pumps with		
Sr. no	TCL in kW	MD using in conventional manner	Power consumption per day in kWH (@ 6hr.)	TCL in kW	MD using VFD and APFC panel	Power consumption per day in kWH
1	55	33	198	37	11.1	66.6

Power saving by using MBBR type STP with VFD						
	Using Conventional type STP			Using MBBR Type STP with VFD		
Sr. no	TCL in kW	MD in kW	Power consumption per day in kWH	TCL in kW	MD in kW	Power consumption per day in kWH
1	126	126	2520	126	88.2	1764

Power saving by using CO sensors & VFD on Basement Ventilation Fans						
Sr. no	Description	TCL in kW	MD using in conventional manner	Power consumption per day in kWH	MD using VFD + CO sensor	Power consumption per day in kWH
1	Tube Axial	84	42	504	42	42
**		**84**	**42**	**504**	**42**	**42**

ENERGY SAVING FOR EXTERNAL LIGHTING							
Sr. No.	Description	Connected Load (kW)	Demand Load (kW)	Assumed Operative Hours / day	Power Consumption / day (kWH)	No. of days of usage in an year	Power Consumption / year (kWH)
1	Using MH lamps (150W)	10	10	12	120	365	43800
2	Using LED lamps (45W)	3.0	3.0	12	36	365	13140
3	Total Consumption						
	Using Solar Power						
4	Using MH lamps (150W)	10	10	12	120	275	33000
5	Using LED lamps (45W) considered for this project	3.0	3.0	12	36	275	9900

POWER SAVING CALCULATIONS WITH SOLAR WATER HEATERS								
Sr. No.	Tower	No. of units	No. of Geysers per unit	TCL per unit (3kW per Geyser)	Power Consumption / day (in kWH for 1 Hr / Day)	Power Consumption / day on solar water (in kWH for 1 Hr / Day)	Power Consumption per Year on Utility Power (365 days)	Power Consumption per Year on Solar Power (275 days)
1	1 BHK	216	1	3	648	194	236520	17496
2	2 BHK	144	2	6	864	259	315360	23328
3	3 BHK	180	3	9	1620	486	591300	43740
	Total	**540**	**6**	**18**	**3132**	**939.6**	**1143180**	**84564**
Total Power Consumption per year on Utility Power							**1143180**	**kWH**
Total Power Consumption per year on Solar Power							**84564**	**kWH**

POWER SAVING SUMMARY					
Sr.No	Description	Maximum Demand in (kW)	Power consumption /year without	Total Consumption / year by using Energy saving	Difference in power consumption in kWh
1	Common Lighting- (parking + common areas)	47	498094	204524	293570
2	Internal Flat Lighting	85	433935	248693	185242
3	VFD and APFC Panel on Lifts	226.8	118260	82782	35478
4	VFD and APFC Panel on 90% Effcient Water Pumps	66.6	72270	24309	47961
5	MBBR type STP with VFD	88.2	919800	643860	275940
4	VFD & CO sensors for Basement Ventilation fans	42	183960	15330	168630
7	External Lighting	10	43800	9900	33900
8	Water Heating on Solar	940	1143180	84564	1058616
	TOTAL	**1505**	**3413299**	**1313962**	**2099337**
Total Demand Load		**2693**			
Power Consumption in kWH / day		**2693**			
Total Counted load (where enregy saving tried)		**1505**			
Total Un Counted load (where enregy saving not tried)		**1188**			
Consumption in kWH / year (Without Energy saving measures		**8616460**			
Consumption in kWH / year (With Energy saving measures		**6517123**			
Difference		**2099337**			
Percentage Saving		**24.4**	**%**		

10 ENVIRONMENT MANAGEMENT PLAN

10.1 The environment management plan would consist of all mitigation measures for each item wise activity to be undertaken during the construction, operation and the entire life cycle to minimize adverse environmental impacts as a result of the activities of the project. It would also delineate the environmental monitoring plan for compliance of various environmental regulations. It will state the steps to be taken in case of emergency such as accidents at the site including fire.

The Environmental Management Plan is explained briefly in **Annexure -20**.

CONCEPTUAL PLAN

1. INTRODUCTION

Alliance Mall Developers Co Pvt Ltd (Alliance) is a special purpose vehicle floated by Prozone Intu Properties Limited to run its Coimbatore project. Prozone Intu is a specialist retail and residential – led mixed – use real estate development company, harnessing Intu Properties experience as UK's largest retail real estate developer combined with provogue (India) Ltd's in – depth knowledge of the India market. The company has a planned pipeline of projects spread across India including Coimbatore, Aurangabad, Nagpur & Indore.

Alliance proposes to develop a mall, Guest house and residential development at Sarvanampatti Village, Coimbatore North Taluk, Coimbatore Dist. The proposed mall will have Multiplex, Restaurant, Food Court. Proposed residential development on the same land parcel will have Three Towers, Tower –A (1 BHK (EWS)), Tower B & Tower C has 2 BHK and 3 BHK units and a Guest House with amenities.

2. PROJECT DESCRIPTION

Alliance Mall Developers Co. Pvt. Ltd. Proposes to develop a Mall and residential buildings with Guest house at Sarvanampatti village, Coimbatore North Taluk, Coimbatore District which is about 6 km from Coimbatore Airport. Land use certificate is enclosed in **Annexure 2.** The proposed project involves the development of Mall, Guest house and Residential Towers A, B, C which falls under item no. 8(a) which is categorized as B2 i.e. Building and Construction projects which covers an area of $\geq$ 20,000 sq.m and < 1,50,000 sq.m as per the EIA notification 2006.

2.1 Project Location

The proposed site is located at Coimbatore District, Tamil Nadu. The project is located in the survey no. of SF 199(Part), SF 200, SF201, SF 205(Part), SF 206. The satellite image of site and surrounding features is enclosed as **Annexure 8.**

2.2 Project Components

The proposed Mall will have Multiplex, Restaurant and Food Court Guest house and Residential Towers A, B &C Area Break up

The total plot are of the project is 99552.65 sq .m. The detailed area break up is given in Table below

Table 1 Area Break up for the Proposed project

S.No.	Components	Area (Sqm)
1	Plot Area	99552.65
2	Built Up area	Particulars: Built UP; Existing: 67557.07 sq mt; Proposed: 64512.01 sq mt (Resi+ Guest house); Total: **1,32,069.08** sq mt
3	Ground Coverage	Particulars: Ground Coverage; Existing (Sq.m): 27390.12; Proposed (Sq.m): 5033.11+1279.87 (Resi+ Guest house); Total (Sq.m): 33703.10
4	Roads and pavements	Particulars: Road & pavements; Existing (Sq.m): 9451.66; Proposed (Sq.m): 8325; Total (Sq.m): 17776.66
	Green Belt	Particulars: Green Belt; Existing (Sq.m): 16,946.92 sq.m; Proposed (Sq.m): 5,251.67 sq.m; Total (Sq.m): 22,198.59 Sq.m
5	OSR Area	Particulars: OSR Area; Existing (Sq.m): 6459.08 sq.m; Proposed (Sq.m): 3496.18 sq.m; Total (Sq.m): 9955.26 Sq.m
6	Surface Parking Area	Particulars: Road & pavements; Existing (Sq.m): 2767.33; Proposed (Sq.m): 1525.03; Total (Sq.m): 4292.36
7	Future Development Area	Particulars: Future development area; Existing (Sq.m): -; Proposed (Sq.m): -; Total (Sq.m): 16500

2.3 Salient Features of the Site

Following are the salient features of the project site

Selection criteria	Details	
Latitude & Longitude	Latitude 11°03'22.43"N Longitude 76°59'40.37"E	
Elevation above Mean Sea Level	435m	
Climatic Conditions	Summer	Max. Temp. 34.7° C Min. Temp. 22.1° C
	Winter	Max. Temp.32.2° c Min. Temp.19.2° C
	Average Annual Rainfall: 61.22 cm	
Land availability	99,552.65sq .m	
Land use	Commercial where Residential is allowed.	
Connectivity	NH 209	
Nearest Railway station	Coimbatore Station – 7Km	
Nearest airport	Coimbatore Airport – 6Km	
Topography	Plain	
Archaeologically important places	Nil in 15 km radius	
National parks/ Wildlife Sanctuaries	Nil	
Seismicity	The study area falls under seismic zone-III	
Water source	Ground water-TWAD	

2.4 Population

Particulars	Existing	Proposed	Total
Permanent Influx	0	2700	2700
Temporary Influx	11000	200	11200

2.5 Project Cost

Particulars	Existing	Proposed	Total
Project Cost	Rs 190 Cr	Rs 87 Cr	Rs 277 Cr

3. BASIC INFRASTRUCTURE

3.1 Construction Materials

The major materials required in the construction are steel, cement, bricks, metal, flooring tiles/stones, wood, sanitary and hardware items, electrical fittings, water, etc. All the items to be used in the proposed project will be of good quality as much as procuring directly from the dealers or manufacturers will use possible ISI brand items. Local items sand, metal, bricks, etc will be procured through standard suppliers in the market. For the proposed construction, following quantity of construction material shall be required.

S.No.	Item	Proposed Qty
1	Cement	715764 Bags
2	Sand	61269 m^3
3	Metal	76198m^3
4	Reinforcement steel	8213 M.T

3.2 Water

During Construction Phase

Water requirement for the construction phase will be taken from Ground water and the quantity shall be around 143 KLD.

Particulars	Existing	Proposed	Total
Water requirement during Construction	109 KLD	143 KLD	252 KLD

During Operation Phase

The daily requirement of water will be 410 KLD of which fresh water demand is 261 KLD, will be met from the recycling of treated sewage and used for toilet flushing (330 KLD) and gardening (18 KLD). Excess treated sewage of 149 KLD will be disposed to Senthel Aggregates and Cement Products for reuse. The source of water is Ground water / TWAD. The water Balance is enclosed as **Annexure -3.**

Particulars	Existing	Proposed	Total
Total Water Demand	196 KLD	410 KLD	606 KLD
Fresh Water Demand	36 KLD	261 KLD	297 KLD

3.3 Power

The total power requirement for the proposed project is 9525 kVA.

Particulars	Existing	Proposed
Connected Load	8864 KVA	9525 KVA
Demand Load	4464 KVA	3232 KVA

The supply will be provided by TNEB. Power back up is provided by means of DGs. The break up is 1 X 400KVA DG sets for Residential Development (Common area only), for Guest house.

Particulars	Existing	Proposed
DG Sets	2 x 1500 KVA	1 x 400 KVA

3.4 Sewage Treatment Plant

During operation, 330 KLD of wastewater will be generated from Residential apartments which will be treated in the sewage treatment plant and the treated sewage will be utilized for flushing, gardening. The STP details of mall and Residential units are enclosed in **Annexure- 14.**

Sewage Quantity, Treatment, Reuse & Disposal

Quantity of sewage	330 KLD
STP Capacity	390 KLD
Collection of sewage	Sewage generated during the operation phase will be collected through underground sewerage system (pipe drain) for treatment in STP.
Treatment of sewage	Sewage will be treated up to the tertiary level in a Sewage Treatment Plant based on Activated sludge process. The secondary treated sewage will be treated **in UV and UF plant.**
Reuse / recycle of treated sewage	Out of 330 KLD of treated sewage, 261 KLD recycled for toilet flushing, 18 KLD for gardening, and 149 KLD of excess treated sewage will be given to RMC builders.

3.5 Rain water Harvesting & Storm Water Management

Rain water from roof tops will be drained through rain water vertical down take pipes. These vertical down take pipes shall be located at suitable locations inside the shafts or periphery of the building. The terrace will be sloped. The down take pipes will be connected to the rainwater collection tank located at Lower Ground for storage purpose. The collected rain water will be utilized during rainy season as a source after proper treatment. Rainwater harvesting calculation in **Annexure -12**. The storm water drainage plan with rainwater harvesting pits and the location of rain water collection tank is enclosed in **Annexure -13.**The excess runoff will be connected to the existing storm water drainage system.

3.6 Solid Waste Management

Construction phase

Solid wastes of construction phase will constitute excess excavated earth and construction debris with bits and pieces of steel, air-conditioning insulation material, packaging material and wood used for shuttering purposes etc.

- No construction material or wastes e.g. excavated soil, debris etc. will be dumped outside the project area.
- Construction waste and debris will in general be used for filling of land within the premises.
- Unusable steel bits and pieces, piping, concrete reinforcement will also be collected at site and sold to recyclers
- A significant portion of wood scrap can be reused on site.
- Recyclable wastes such as Cement bags, waste paper and cardboard packing material, glass fibre insulation, roofing etc shall be sold to recyclers.
- Construction sites are sources of many toxic substances such as paints, solvents, wood preservatives etc. Wastes generated from these sources during construction phase shall be stored in sealed containers, labelled and disposed of as required by the Hazardous Wastes Management and Handling act Amendment Rules (MoEF 2003).

- Maximum care will be taken to prevent soil erosion and contamination

Operation Phase

<table>
<tr><td>Quantity of solid wastes</td><td>1306 kg per day (Organic waste – 392 kg/day, Inorganic Waste 914 kg/day)
<table>
<tr><th>Particulars</th><th>Existing</th><th>Proposed</th><th>Total</th></tr>
<tr><td>Organic</td><td>1786kg/day</td><td>392 kg/day</td><td>2178 kg/day</td></tr>
<tr><td>STP Sludge
(used in manure)</td><td>17 kg/day</td><td>40 kg/day</td><td>57 kg/day</td></tr>
<tr><td>Inorganic</td><td>2183kg/day</td><td>914 kg/day</td><td>3097 kg/day</td></tr>
<tr><td>Total</td><td>3969kg/day</td><td>1306 kg/day</td><td>5275 kg/day</td></tr>
</table></td></tr>
<tr><td>Nature of solid wastes</td><td>Organic waste: Waste vegetables, foods, sewage sludge etc.
Inorganic waste: Plastics, polythene bags, glass etc.</td></tr>
<tr><td>Collection and disposal of solid wastes</td><td>The solid wastes generated will be segregated into organic and inorganic components and collected in separate bins. The organic biodegradable wastes (waste vegetables, foods etc.) will be composted and reused at site. Dewatered/ dried sludge from STP will be used as manure in horticulture.</td></tr>
<tr><td>Recycling of solid wastes</td><td>The inorganic wastes comprising recyclable materials, such as plastic, glass etc., will be sold by flat owners to prospective buyers.</td></tr>
<tr><td>Excavated earth</td><td>Around 32,770 m3 of soil will be excavated for the proposed construction of Guest House & Residential Development.

This excavated soil will be properly stacked within the site under tarpaulin cover; and will be reused for backfilling purpose, road construction etc. The top-soil will be preserved separately and will be used for landscaping purpose only. Hence, no immediate adverse impacts on the land environment are envisaged.</td></tr>
</table>

3.7 Green Belt Development

It is proposed to have tree plantation along the periphery of the site and also to develop lawn and greenery inside the project area. The landscape plan is enclosed as **Annexure- 16.** The vegetation for the greenbelt will be selected from the native species adapted to the local environment.

Particulars	Existing	Proposed	Total
Green Belt	16,946.92 sq.m	5,251.67 sq.m	22,198.59 Sq.m
OSR Area	6459.08 sq.m	3496.18 sq.m	9,955.26 Sq.m
Total OSR + Green Belt Area	23,406 sq.m	8747.85 sq.m	32,153.85 sq.m

Landscaping has been taken care of in view of the environment and aesthetics of the surrounding areas. Stress has been laid on providing ample green areas in close conjugation to the hard areas in a manner, that the overall harmony and ambience is maintained. Landscaping takes into account the various aspects of the architectural design. Trees are proposed to be planted to form an integral part of the landscape plantation and their selection is based on their ability to provide shade, flowers and fragrance apart from their high-yielding growth pattern. The addition of shrubs, hedges and ground cover will add to the aesthetics and softness to the hard building surfaces.

3.8 Energy Management

The building will use energy efficient and environmental friendly designs that will control formulation of heat island effect. There will be also green cover at the site to reduce formation of heat island. Passive design concepts have been used to minimize energy consumption and maximize the energy efficiency.

Solar energy will be used partly for external lighting. The amount of energy saving by solar energy is given in table below.

3.8.1 Energy Conservation measures

Following are the measures used for energy saving: -

- Energy efficient Lighting fixtures with electronic ballasts .
- LED light fixtures.
- VFD and APFC Panel on Lifts
- MBBR type STP with VFD
- CO sensors & VFD on Basement Ventilation Fans
- Solar lighting for external lighting
- Solar water heaters

3.9 Parking and Traffic Management

Adequate parking is provided for smooth movement of vehicles within the site.

Guest House & Residential Development

S.No	Floor	Cars		Two Wheelers	
		Nos.	Area (m2)	Nos.	Area (m2)
1	Basement	126	1575	183	329
2	Stilt 1	117	1462.5	171	308
3	Surface	122	1525	-	
Total		355	4562.5	354	637

Traffic Management Plan at the Entry & Exit to the Project Site:

The Project will have access through NH 209 with an approach road of 18mts. Internal roads of 7.2 m wide will be provided within the site for smooth movement of vehicles. The traffic circulation plan showing the entry and exit and the internal circulation is given as **Annexure 18.**

3.10 Fire Fighting Systems

Adequate fire protection facilities will be installed including fire detectors, fire alarm and fire fighting system to guard the building against fires. All fire protection facilities are designed as per the latest National Building Code. The NOC obtained from Fire department for Mall is enclosed as **Annexure - 19**

4. MITIGATION MEASURES FOR AIR POLLUTION

4.1 Construction Stage

During the construction stage there are chances of fugitive dust generation due to (i) excavation, (ii) movement heavy construction vehicles along the haul roads and (iii) storage and handling of construction materials. However, the generation of such dusts is most likely limited within the project boundary and negligible quantity is expected to the surrounding environment. To minimize such impact following measures shall be under taken:

Site clearance

- The working area for the uprooting of shrubs or vegetation or for the removal of boulders or temporary or permanent structures shall be sprayed with water or a dust suppression chemical immediately before, during and immediately after the operation so as to maintain the entire surface wet.

Haul Road:

- Every main haul road (i.e. any course inside a construction site having a vehicle passing rate of higher than 4 in any 30 minutes) shall be paved with concrete, bituminous materials, metal plates, and kept clear of dusty materials; or sprayed with water or a dust suppression chemical so as to maintain the entire road surface wet.
- Regular water spraying on haulage roads during transportation of construction materials by water sprinklers
- Transfer points for transporting construction materials shall be provided with appropriate hoods/chutes to prevent dust emissions;
- Dumping of construction materials should be from an optimum height (preferably not too high) so as to reduce the dust blow

Use of vehicle

- Immediately before leaving a construction site, every vehicle shall be washed to remove any dusty materials from its body and wheels.
- Where a vehicle leaving a construction site is carrying a load of dusty materials, the load shall be covered entirely by clean impervious sheeting to ensure that the dusty materials do not leak from the vehicle.

Stock Piles:

- All loose material either stocked or transported shall be provided with suitable covering such as tarpaulin, etc.
- Water sprinkling shall be done at the location where dust generation is anticipated;
- Over Burden (OB) waste dumps shall be sprayed with water as they are major sources of air borne particulate matter/dust; and,

- OB waste dumps shall be reclaimed / afforested to bind the loose soil and to prevent soil erosion.

Building construction

- Where a scaffolding is erected around the perimeter of a building under construction, effective dust screens, sheeting or netting shall be provided to enclose the scaffolding from the ground floor level of the building
- Any skip hoist for material transport should be totally enclosed by impervious sheeting

4.2 Operation Stage

Table below gives the overview of the Air Pollution Control measures adopted during the project operation stage

Air Pollution Control Measures

S. N.	Air	Source	Control Measures
1	SO_2, NOx	DG sets	Action would be taken for providing adequate stack height as per CPCB norms.
2	Dust, SO_2, NO_x, CO, HC	Vehicles	➢ Roads will be maintained properly to reduce dust. ➢ All vehicle owners will be informed to follow the emission standards fixed by the government authorities to keep the air pollutants under control. ➢ Pollution under Control checkup camps will be arranged for vehicles.

Measures for Controlling Vehicular Emission

To control the emissions from the movement of vehicular traffic in the proposed project, following measures shall be adopted:

- Proper maintenance of the internal paved areas inside the boundary.
- Adequate greenbelt will be developed and maintained as described in the subsequent portions.
- Informatory sign shall be provided to encourage vehicle owners to maintain their vehicle and follow the emission standards fixed by Government Authorities.

Control of Sulphur Dioxide Emission

To minimize the effect of sulphur dioxide emissions on ambient air quality, a stack is installed for the exhaust of the flue gases at a safe height complying with the standards laid down by MoEF. The main source of SO2 emissions from the proposed project is the DG set operations. It would be ensured that all stacks of DG sets would be designed as per the stack height norms of MoEF. Diesel used for the DG sets will comply with the MOEF specifications.

Control of Particulate Emissions

Particulate emissions are mainly resulted from the movement of vehicles in the project site. Keeping this in mind the internal paved area of the complex will be well maintained. Green Belt has been proposed in the campus. The green belt development is designed basically to promote biodiversity enhancement, environmental management, land regeneration and water management, with technology transfer of the above activities for wider application.

5. MITIGATION MEASURES FOR NOISE POLLUTION

5.1 Construction Stage

- During the construction stage, expected noise levels shall be in the range of 80-85 dB (A) which will decrease with increase in distance as per the Inverse Square Law.
- Administrative as well as engineering control of noise will be implemented.
- Isolation of noise generation sources and temporal differentiation of noise generating activities will ensure minimum noise at receiver's end.
- To prevent any occupational hazard, earmuff / earplug shall be given to the workers working around or operating plant and machinery emitting high noise levels.
- Careful planning of machinery operation and scheduling of operations shall be done to minimize such impact.

5.2 Operation Stage

All the equipment in the proposed project would be designed to have a noise level not exceeding 85-90 dB (A) as per the requirement of Occupational Safety and Health Administration Standards. There are few potential sources such a Pumps, etc that would generate noise levels above 85 dB (A) whenever in operation. For the noise from DG Sets, there would be acoustic enclosure, which would lower the noise level. Therefore, adequate protective measures in the form of earmuffs / earplugs shall be given to workers working in these areas.

An adequate green belt cover shall be provided and the species will be selected based upon their Air-Pollution Tolerance Index (APTI), Noise abatement capacity and local availability and landscape requirements. Thus through the greenbelt there shall be significant attenuation of noise generation.

6. DISASTER MANAGEMENT PLAN

Disaster is an unexpected event due to sudden failure of the system, external threats, internal disturbances, earthquakes, fire and accidents. Following subsection describes the measures will be undertaken by the project proponent to prevent / minimize risk of unexpected event. The various necessary steps to be taken while planning for any disaster management are-

6.1 Preventive Action

Once the likelihood of a disaster is suspected, action has to be initiated to prevent a failure. Engineers responsible for preventive action should identify sources of repair equipments, materials, labour and expertise for use during emergency.

Reporting Procedures

The level at which a situation will be termed a disaster shall be specified. This shall include the stage at which the surveillance requirements should be increased both in frequency and details. The project In-charge should notify the officer for the following information:

- Exit points for the public,

- Safety areas
- Nearest medical facilities.

6.2 Communication System

An efficient communication system is absolutely essential for the success of any disaster management plan. This has to be worked out in consultation with local authorities. More often, the entire communication system gets disrupted when a disaster occurs. The damage areas need to be clearly identified and provided with temporary and full proof communication system.

6.3 Emergency Action Committee

To ensure coordinates action, an Emergency Action Committee should be constituted. Emergency Action Committee will prepare the evacuation plan and procedures for implementation based on local needs and facilities available. The plan should include:

- Demarcation of the areas to be evacuated with priorities;
- Safe area and shelters;
- Security of property left behind in the evacuated areas;
- Functions and responsibilities of various members; and,
- Setting up of joint control action.

All personnel involved in the Emergency Action Plan should be thoroughly familiar with all the elements of the project site area and their responsibilities. The staff at the site should be trained for problem detection, evaluation and emergency remedial measures. Individual responsibility to handle the segments in emergency plan must be allotted.

6.4 Emergency Measures

The emergency measures are adopted to avoid any failure in the system such as lights, fire, means of escape, ventilation shafts etc. The aim of Emergency Action Plan is to identify areas, population and structures likely to be affected due to a catastrophic event of accident. The action plan should also include preventive

action, notification, warning procedures and co-ordination among various relief authorities. These are discussed in following sections.

6.5 Fire Protection

The building materials should be of appropriate fire resistance standard. Wood shall not be used for any purpose, excluding artificial wood products, which are flame resistant. The materials which have zero surface burning characteristics need to be used. The electrical systems shall be provided with automatic circuit breakers activated by the rise of current as well as activated by over current. The design will include provision for the following:

- Fire prevention measures;
- Fire control measures;
- Fire detection systems;
- Means of escape;
- Access for fireman; and,
- Means of fire fighting.

Accumulations of refuse of any inflammable material like paper, plastic cartons constitute a major fire hazards and should not be permitted. Smoking should be strictly prohibited at all locations.

All aspects of fire prevention and control will be dealt in close collaboration with the fire fighting authority.

7. ENVIRONMENTAL MONITORING PLAN

To check the effectiveness of mitigation measures as proposed, a detail environmental monitoring plan shall be implemented both during the construction and operation stage of the project. There shall be a project implementation unit (PIU) and it will be the responsibility of PIU to implement such monitoring programme. Such monitoring activities will help the PIU to maintain the quality of environment through adequate checking and control of mitigation measures and environmental infrastructures. There

shall be monitoring programme both for the construction and operation stages of the project. Detailed EMP is enclosed in **Annexure -20**

8. BUDGET FOR ENVIRONMENTAL MANAGEMENT

The environmental budget of the project will include the cost that will be incurred for implementing the environmental infrastructures and monitoring during the construction and operation stages of the project. A capital cost provision of about Rs.278 Lakhs has been kept in the project cost towards the environmental protection, control & mitigation measures and implementation of the EMP. The budgetary cost estimate for the EMP is given in table below.

Environmental Budget

S.No.	Description	Capital Cost (Rs. Lakhs)	Operating Cost (Rs.Lakhs)
1.	Sewage Treatment Plant	75	8
2.	Landscaping & Gardening	10	3
3.	Solid waste Management	15	1
4.	Rainwater harvesting	27	5
5.	Solar water heaters	15	0.75
6.	Solar Lighting	10	0.55
7.	Fire fighting	250	5
8.	Air pollution Control measures	12	2.5
	Total Cost	**414**	**25.8**

9. CONCLUSION

- There is minimum negative impact on Air, Noise and Water Environment.
- Treated Waste Water will be reused for gardening, flushing and cooling purpose.
- Rain Water harvesting system is proposed.
- Organic waste converter for solid waste management is proposed.
- There will be positive Impact on Social conditions in and around the site.
- The Project will not result in any adverse impact to the Environment.

- The marginal impact of setting up the Development in the proposed location will be fully mitigated by the Environment Management Plans. (EMP)
- Definitely the project will improve the quality of living being offered through better environmental aspects like large landscaped areas, less ground coverage & better amenities.

AREA STATEMENT

ANNEXURE - 2

Particulars		Existing EC obtained in 2013 (Sq mt)	Built up Area of Mall (Under construction) (Sq mt)	Proposed Built up Area (Sq mt)	Total (Sq mt)
		A	**B**	**C**	**D=B+C**
Mall (Mall, Multiplex, Restaurant, Food Court)	BUA	56,721.88	44,514.85		44,514.85
	Parking	39,718	23,042.22		23,042.22
Guest House & Residential Development	BUA			1,279.87 + 53,205.48	54,485.35
	Parking			10,026.66	10,026.66
Total	**BUA**				**99,000.20**
	Parking				**33,068.88**
Grand Total					**1,32,069.08**

PROJECT SUMMARY

Name of the Project	**Existing Mall** (Mall, Multiplex, Restaurant, Food Court), **Proposed Guest House & Residential Development**				
Location	Saravanampatti Village, Coimbatore North Taluk, Coimbatore District				
Project Proponent	Alliance Mall Developers Co. Pvt. Ltd, Mumbai				
S.F.Nos.	199/1A , 200 part , 201, 206 205/2 Part				
Total Land Area	99552.65 sq.m				
Built Up area (Sq mt)	**Particulars**	**Existing EC obtained (A)**	**Built up Area of mall Under construction (B)**	**Proposed Built up (C)**	**Total (D = B+C)**
	BUA	56,721.88	44,514.85	1,279.87 + 53,205.48	99,000.20
	Parking	39,718	23,042.22	10,026.66	33,068.88
	Total Built Up Area				1,32,069.08
Project Cost	Project Cost	Rs 190 Cr	Rs 87 Cr		Rs 277 Cr
Architect	Bentel & Associates				
MEP Consultant	Clancy Global Consulting Engineers				
EIA Consultant	Hubert Enviro Care Systems Pvt. Ltd				

BRIEF DESCRIPTION OF THE PROJECT

Details	Under Construction	Proposed	Total
Plot area (sq mt)	65,165.78	34,386.87	99,552.65
Built up area (sq mt)	44,514.85	53,205.48 + 1,279.87 (Resi + Guest house)	99,000.20
Parking Area (sq mt)	23,042.22	10,026.66	33,068.88
Total Area (sq mt)			1,32,069.08
Ground coverage (sq mt)	27390.12	5033.11 + 1279.87 (Resi + Guest house)	33703.10
Road & pavements(sq mt)	9451.66	8325	17776.66
Green Belt (sq mt)	16,946.92	5,251.67	22,198.59
OSR Area(sq mt)	6459.08	3496.18	9,955.26
Total OSR + Green Belt Area(sq mt)	23,406	8747.85	32,153.85
Surface Parking Area (sq mt)	2767.33	1525	4292.36
Future development area	-		16500
Number of Blocks/floors	Lower Ground + G + 2 floors	Tower A (EWS) – Basement + Stilt + 18 floors + Terrace Tower B – Basement + Stilt + 18 floors + Terrace Tower C – Basement + Stilt + 18 floors + Terrace (total 540 units including 216 units of EWS) Guest House – Ground floor	Mall (Mall, Multiplex, Restaurant, Food court, Guest house and Residential units)

BRIEF DESCRIPTION OF THE PROJECT

Details		Under Construction	Proposed	Total
Building Height		27 m	59.80 m	59.80 m
Width of approach road		30 m NH 209		
Parking facilities		Car parking – 1100 Nos. Two wheeler – 430 Nos.	Car parking – 355 Nos. Two wheeler parking -354Nos.	Car parking – 1455 Nos. Two wheeler parking - 784 Nos.
Power requirement (Demand Load)		4464 KVA	3232 KVA	7696 KVA
Power back-up		2x 1500 kVA	1x 400 kVA	2 x 1500 KVA + 1 x 400 KVA
Water requirement	Total	196 KLD	410 KLD	606 KLD
	Fresh	36 KLD	261 KLD	297 KLD
	Recycled	160 KLD	149 KLD	309 KLD
Water Source		Municipality/ Ground		
Population (Persons)	Permanent	0	2700	2700
	Temporary	11000	200	11200

SITE PLAN

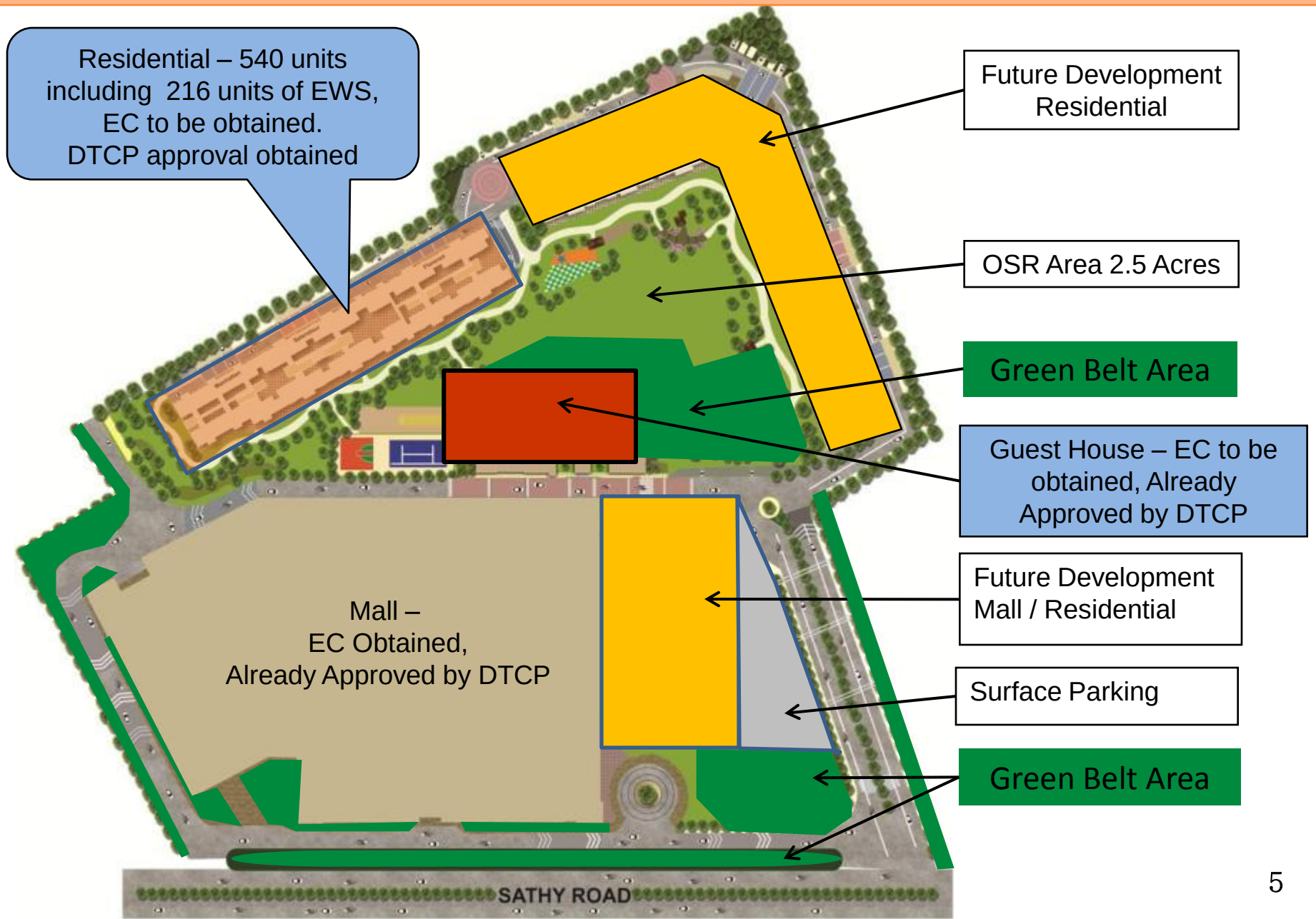
Residential – 540 units including 216 units of EWS, EC to be obtained. DTCP approval obtained
Future Development Residential
OSR Area 2.5 Acres
Green Belt Area
Guest House – EC to be obtained, Already Approved by DTCP
Future Development Mall / Residential
Surface Parking
Green Belt Area
Mall – EC Obtained, Already Approved by DTCP
SATHY ROAD

ANNEXURE - 3

सत्यमेव जयते

भारत सरकार
GOVERNMENT OF INDIA
पर्यावरण ,वन एवं जलवायु परिवर्तन मंत्रालय
MINISTRY OF ENVIRONMENT, FORESTS & CLIMATE CHANGE
Regional Office (South Eastern Zone),
1st & 2nd floor, HEPC Building, No.34, Cathedral Garden Road,
Nungambakkam, Chennai - 600034

SEIAA/TN/F.459/EC 80/163/2012-13

Dated: 08-12-2014

To,

The General Manager
Alliance Mall Developers Co. Pvt. Ltd
SF. No 201, Sivanandhapuram,
Sathy Road, Saravanampatti P.O
Coimbatore-641035
Phone-0422-2669928

Subject: **Certified copy of compliance report of SEIAA,TN- Environmental Clearence- Proposed construction of Mall Development Prozone-M/s Alliance mall Developers Co. Pvt. Ltd, S.F-No 199/1, 200(p), 201 and 206(p) of Saravanampatti Village, Coimbatore North Taluk, Coimbatore District- reg**

Reference: 1. SEIAA/TN/F.459/EC/8(a)/163/2012 dated 03.05.2013

2. Your letter dated 18.08.2014

With reference to the above mentioned subject, please find enclosed a copy of the certified compliance report.

(Dr. C. Kaliyaperumal)
Director (S)

Dr. C. KALIYAPERUMAL, M.E., PhD
Director (S)
Government of India
Ministry of Environment, Forests & Climate Change
Regional Office (South Eastern Zone)
HEPC Building, No.34, Cathedral Garden Road,
Nungambakkam, Chennai-600 034.

Enclosed as above

Certified Copy of the Compliance Report

Subject: SEIAA,TN- Environmental Clearence- Proposed construction of Mall Development Prozone-M/s Alliance mall Developers Co. Pvt. Ltd, S.F-No 199/1, 200(p), 201 and 206(p) of Saravanampatti Village, Coimbatore North Taluk, Coimbatore District- reg

Reference: SEIAA/TN/F.459/EC/8(a)/163/2012 dated 03.05.2013

Part A: Specific Conditions

I. Construction Phase

S.No	Conditions	Status of Compliance
1.	"Consent for Establishment" shall be obtained from the Tamil Nadu pollution Control Board and a copy shall be submitted to SEIAA, Tamil Nadu before taking up of any construction activity at the site.	The project authorities stated that CFE has been obtained from TNPCB and was submitted to SEIAA before starting the construction works.
2.	The entire water requirement during construction phase shall be met from ground water as per the permission obtained from the TWAD, as committed	Agreed to comply. However water is brought/ purchased from outside now. Only foundation works are going on presently.
3.	The height and coverage of the constructions shall be in accordance with the existing FSI/FAR norms.	As stated that construction will be carried out in accordance with the existing FSI/FAR norms.
4.	The approval of the competent authority shall be obtained for structure safety of the buildings due to earthquake, adequacy of fire fighting equipments, etc as per National Building Code including protection measures from lightening etc.	Agreed to obtain the approval for structure safety of the buildings due to earthquake, adequacy of fire fighting equipments, etc as per National Building Code including protection measures from lightening etc.
5.	All required sanitary and hygienic measures should be in place before starting construction activities and they have to be maintained throughout the construction phase.	They have provided required sanitary and hygienic measures to the construction workers and also agreed to maintain throughout the construction phases.
6.	A first aid room shall be provided in the project site during the construction phase of the project.	A first aid room has been provided at site with required facilities and person who has been trained
7.	Adequate drinking water and sanitary facilities should be provided for construction workers at the site. The safe disposal of wastewater and solid waste generated during the construction phase should be ensured.	Drinking water and sanitary facilities are provided to the construction workers at the site. Septic tanks and soak pits are provided. The solid waste generated is collected and given to municipal solid waste disposal facility.
8.	All the labourers to be engaged for construction should be screened for health and adequately treated before engaging them	All the laborers were screened for health and treated before engaging them to work at the site as informed

Dr. C. KALIYAPERUMAL, M.E., PhD
Director (S)
Government of India
Ministry of Environment, Forests & Climate Change
Regional Office (South Eastern Zone)
HEPC Building, No.34, Cathedral Garden Road,
Nungambakkam. Chennai-600 034.

S.No	Conditions	Status of Compliance
	to work at the site.	by the project authorities.
9.	The solid waste in the form of excavated earth excluding the top soil generated from the project activity shall be scientifically utilized for construction of approach roads and peripheral roads as reported.	Excavated earth is stored at site and agreed to utilize for construction of internal & approach roads,
10.	All the top soil excavated during construction activities should be stored for use in horticulture/ landscape development within the project site.	Removed top soil is stacked separately and agreed to use for landscape development.
11.	Disposal of other construction debris during construction phase should not create any adverse effect on the neighboring communities and be disposed of only in approved sites with the approval of competent authority with necessary precautions for general safety and health aspects of the people.	The construction debris are segregated, stored separately and agreed to reuse within the project site.
12.	Construction spoils, including bituminous materials and other hazardous materials, must not be allowed to contaminate water courses. The dump site for such materials must be secured so that they should not leach into the adjacent land/ lake/stream etc.	No bituminous or other hazardous materials are used at the site.
13.	Low sulphur diesel shall be used for the diesel generators sets to be used during construction phase. The air and noise emission shall conform to the standards prescribed in the Rules under the Environmental Protection Act, 1986 and the Rules framed thereon.	The diesel generator set used are of low sulpur diesel type as informed by the project authorities.
14.	Vehicles hired for bringing constructional materials to the site should be in good condition and should conform to air and noise emission standards prescribed by the TNPCB/CPCB. The vehicles should be operated only during non-peak hours.	Generally vehicles are hired and in good condition. Emission check is done for all vehicles and as informed that the vehicles are operated during non-peak hours.
15.	Ambient air and noise level should conform to residential standards prescribed by the TNPCB both during day and night. Incremental pollution loads on the ambient air and noise quality should be closely monitored during construction phase.	The ambient air quality and noice levels are monitored through an external agency and as per the reports the levels are within the limit.
16.	Fly ash bricks should be used as building material in the construction as per the provision of fly ash notification of September, 1999 as amended.	Agreed to use fly ash bricks.
17.	Ready mix concrete of high quality should be used in building construction and necessary	Ready mixed concrete is used and as informed that necessary cub-tests

Dr. C. KALIYAPERUMAL, M.E., PhD
Director (S)
Government of India
Ministry of Environment, Forests & Climate Change
Regional Office (South Eastern Zone)
HEPC Building, No.34, Cathedral Garden Road,
Nungambakkam, Chennai-600 034.

S.No	Conditions	Status of Compliance
	cub-tests should be conducted to ascertain their quality.	were conducted to ascertain the quality.
18.	Storm water control and its reuse shall be as per CGWB and BIS standards for various applications.	The project construction activities are under initial stages and agreed to comply.
19.	Water demand during construction should be reduced by use of pre – mixed concrete, curing agents and other best practices prevalent.	Ready mix concrete is used in building construction to reduce the water demand in the project. Also agreed to follow curing agents and other best practices once the construction works are in full swing.
20.	Fixtures for showers, toilet flushing and drinking should be of low flow type by adopting the use of aerators/ pressure reducing devices or sensor based control.	The project construction activities are under initial stages and agreed to comply.
21.	Use of glass may be reduced upto 40% to reduce the electricity consumption and load on air conditioning. If necessary high quality double glass with self reflecting coating shall be used in windows.	Agreed to comply
22.	Roof should meet perspective requirement as per energy conservation building code by using appropriate thermal insulation material to fulfill requirement.	Agreed to comply
23.	Adequate measures to reduce air and noise pollution during the construction shall be adopted, conforming to norms prescribed by the TNPCB on noise limits.	The measures taken to reduce air and noise pollution are a) Earth materials are covered with tarpaulins during transportation. b) Water sprinkling is being done. c) By using less noise producing machines etc.
24.	Opaque wall should meet perspective requirement as per Energy Conservation Building code which is mandatory for all air conditioned spaces by use of appropriate thermal insulation material to fulfill requirement.	Agreed to comply
25.	The Project proponent is requested to indicate the probable date of commissioning of the project supported with necessary bar charts.	Probable date of commissioning of the project is 10.06.2016
26.	Adequate fire protection equipments and rescue arrangements should be made as per the prescribed standards.	Fire protection equipments and rescue arrangements are available in the site.
27.	Proper approach road for the fire fighting vehicles and for rescue operations in the event of emergency shall be made.	An approach road is made for fire fighting vehicles and also for rescue operations.
28.	Design of building should be in conformity with Seismic Zone Classification.	The design of building is in confirmity with seismic zone classification as

Dr. C. KALIYAPERUMAL, M.E., PhD
Director (S)
Government of India
Ministry of Environment, Forests & Climate Change
Regional Office (South Eastern Zone)
HEPC Building, No.34, Cathedral Garden Road,
Nungambakkam. Chennai-600 034.

S.No	Conditions	Status of Compliance
		informed by project authorities.
29.	All ECBC norms to be adopted	Agreed to comply
30.	The proponent should also ensure to keep necessary road width as per OM dated 7.2.12 of MoEF, GOI, New Delhi with respect to high rise buildings.	Agreed to comply
31.	Personnel working in dusty areas should wear protective respiratory devices and they should also be provided with adequate training and information on safety and health aspects. Occupational health surveillance program of the workers should be undertaken periodically to observe any contradictions due to exposure to dust and take corrective measures if needed.	PPEs are provided to construction workers. As informed that training on safety and health aspects were given to workers. Further they have agreed to carry out occupational health surveillance program for the workers.
32.	Periodical medical examination of the workers engaged in the project shall be carried out and records maintained. For the purpose, schedule of health examination of the workers should be drawn and followed accordingly. The workers shall be provided with personal protective measures such as masks, gloves, boots etc.	All PPEs are provided to construction workers. They have agreed to carry out occupational health surveillance program for the workers. As informed that MoU with local hospital was made to conduct monthly medical checkup.

II. Operational phase

The project is under construction stage and agreed to comply.

Part-B: General Conditions

Sl.No	Condition	Status of Compliance
1.	The Construction of the structures should be undertaken as per the plans approved by the concerned local authorities/local administration.	Project authorities informed that the construction of the structures will be as per the approved plans by the local authorities/local administration.
2.	It is mandatory for the project proponent to furnish to the SEIAA, Half yearly compliance report in Hard and Soft copies on 1st December and 1st June of each calendar year in respect of the conditions stipulated in the prior Environmental Clearance.	Agreed upon
3.	In case of any change(s) in the scope of the project, a fresh appraisal by the SEIAA shall be obtained.	As per the original plan the project was approved only for construction of Mall with built up area of 56721.88 sq.m The proposal has been revised to increase the total built-up area from 56721.88 sq.m to 141490.78 sq.m.and the proposed Mall will have Restaurant, Retail (Hyper Market,

Dr. C. KALIYAPERUMAL, M.E., PhD
Director (S)
Government of India
Ministry of Environment, Forests & Climate Change
Regional Office (South Eastern Zone)
HEPC Building, No.34, Cathedral Garden Road,
Nungambakkam, Chennai-600 034.

Sl.No	Condition	Status of Compliance
		Kiosk, Vanillas, Multiplex, Entertainment area, Projector room, café etc). For this change only they have requested copy of certified compliance report
4.	A copy of the Clearance letter shall be sent by the proponent to the Commissioner of Corporation/ municipality/ Executive officers of Town Panchayat/ Block Development officers of Panchayat union whichever is applicable and the Local NGO if any from whom suggestions/ representations if any have been received while processing the proposal. The clearance letter shall also be put on the website of the proponent.	A copy of the Clearance letter was sent to the Commissioner, Coimbatore Municipal Corporation as informed.
5.	The SEIAA reserves the right to add additional safeguard measures subsequently, if non compliance of EC conditions are found and to take action, including revoking of this Environmental Clearance as the case may be.	Accepted and noted.
6.	All other statutory clearances such as the approvals for storage of diesel from Chief Controller of Explosives, Fire and Rescue services Department, Civil Aviation Department, Forest Conservation Act, 1980 and Wild life Protection Act 1972, State/central Ground water Authority, Coastal regulatory zone Authority, other statutory and other authorities as applicable to the project shall be obtained by project proponent from the competent Authorities.	The project authorities have obtained certain statutory clearances which are as follows 1) NOC from fire and rescue service 2) Traffic NOC from police department 3) NOC From Tahsildar 4) Planning permission from LPA 5) Consent from TWAD 6) Ground water clearance from CGWB Further they have informed that the other clearances would also be obtained
7.	The project proponent shall advertise with basic details at least in two local newspapers widely circulated in the region, one of which shall be in the vernacular language of the locality concerned, within 7 days of the issue of clearance and a copy of the clearance letter is available with the State Pollution Control Board and also at website of the SEIAA, TN and a copy of the same should be forwarded to the Regional Office of the Ministry of Environment and Forests located at Bangalore.	Advertisements were given in two local news papers and copy of the same were not forwarded to the Regional Office of the Ministry of Environment and Forests located at Bangalore.
8.	Under the provisions of Environment (Protection) Act,1986, legal action shall be initiated against the project proponent, if it was	Agreed to comply

Dr. C. KALIYAPERUMAL, M.E., PhD
Director (S)
Government of India
Ministry of Environment, Forests & Climate Cha
Regional Office (South Eastern Zone)
HEPC Building, No.34, Cathedral Garden Roa
Nungambakkam, Chennai-600 034.

Sl.No	Condition	Status of Compliance
	found that construction of the project has been started without obtaining Environmental Clearance, and for any other action resulting in violation of any condition stipulated in Environmental Clearance.	
9.	The proponent shall upload the status of compliance of the stipulated EC conditions, including results of monitored data on their website and shall update the same periodically. It shall simultaneously be sent to the Regional office of MoEF, Bengaluru, the respective Zonal office of CPCB, Bengaluru and the TNPCB. The criteria pollutant levels namely SPM, RSPM, SO2, NOx (ambient levels as well as stack emissions) or critical sectoral parameters, indicated for the project shall be monitored and displayed at a convenient location near the main gate of the company in the public domain.	The monitored data has not been uploaded on the company's website and agreed to upload. Similarly the data were not submitted to the Regional Office of the Ministry of Environment and Forests located at Bangalore and agreed to submit in future.
10.	A separate environmental management cell with suitable qualified personnel should be set-up under the control of Senior Executive, who will report directly to the Head of the Organization.	A separate Environment management cell has not been set up. However monitoring of environmental parameters is being carried out through an external agency.
11.	The funds earmarked for Environmental Protection measures should be kept in separate account and should not be diverted for other purpose. Year wise expenditure should be reported to the Ministry of Environment and Forests and its regional Office located at Bangalore.	No separate account made for Environmental Protection measures. However amount has been allotted for this purpose. Project authorities have agreed to report the year wise expenditure to RO, MoEF
12.	The Regional Office of the Ministry located at Bangalore shall monitor compliance of the stipulated conditions. The project authorities should extend full cooperation to the officer (s) of the Regional Office by furnishing the Requisite data/ information/monitoring reports.	Agreed to comply
13.	The project proponent shall submit six monthly reports on the status of the compliance of the stipulated EC conditions including the results of monitored data (both in hard copies as well as by e-mail) to the Ministry of Environment and Forests, its regional office Bangalore, the respective zonal office of CPCB, Bangalore, SEIAA and TN and State Pollution Control Board.	Six monthly compliance were not submitted to RO, MoEF and agreed to submit in future.
14.	The Environmental Statement for each financial Year ending 31st March in Form V as is mandated to be submitted by the project	Agreed to comply

Dr. C. KALIYAPERUMAL, M.E., PhD
Director (S)
Government of India
Ministry of Environment, Forests & Climate Change
Regional Office (South Eastern Zone)
HEPC Building, No.34, Cathedral Garden Road,
Nungambakkam. Chennai-600 034.

Sl.No	Condition	Status of Compliance
	proponent to the concerned State Pollution Control Board as prescribed under the Environment (Protection) Rules, 1986, as amended subsequently, shall also be put on the website of the company along with the status of compliance of EC conditions and shall also be sent to the regional office of MoEF, Bangalore by e-mail.	
15.	The Environmental clearance does not imply that the other statutory/ administrative clearances shall be granted to the project by the concerned authorities. Such authorities would be considering the project on merits and be taking decision independently of the Environmental Clearance.	Agreed to comply
16.	The Environmental Clearance does not absolve the applicant/ proponent of his obligation/ requirement to obtain other statutory and administrative clearances from other statutory and administrative authorities.	Agreed to comply
17.	The SEIAA, TN may alter/ modify the above conditions or stipulate any further condition in the interest of Environmental Protection, even during the subsequent period.	Agreed to comply
18.	The SEIAA, TN may cancel the Environmental clearance granted to this project under the provisions of EIA notification, 2006, if at any stage of the validity of this Environmental Clearance if it is found or if it comes to the knowledge of this SEIAA, TN that the project proponent has deliberately concealed and/or submitted false or misleading information or inadequate data for obtaining the Environmental Clearance	Agreed to comply
19.	Failure to comply with any of the conditions mentioned above may result in withdrawal of this clearance and attract action under the provisions of the Environment (Protection) Act, 1986	Agreed to comply
20.	The above conditions will be enforced inter-alia, under the provisions of the Water (Prevention and control of Pollution) Act, 1974, The Air (Prevention and control of Pollution) Act, 1981, the Environment (Protection) Act, 1986, The Public Liability Insurance Act, 1991, along with their amendments, draft Minor Minerals Conservation and Development Rules, 2010 framed under MMDR Act, 1957, National Commission for Protection of Child	Agreed to comply

Dr. C. KALIYAPERUMAL, M.E., PhD
Director (S)
Government of India
Ministry of Environment, Forests & Climate Change
Regional Office (South Eastern Zone)
HEPC Building, No.34, Cathedral Garden Road,
Nungambakkam. Chennai-600 034.

Sl.No	Condition	Status of Compliance
	Right Rules, 2006 and rules made there under and also any other orders passed by the Hon'ble Supreme Court of India/ Hon'ble High Court of Madras and any other courts of Law, including the Hon'ble National Green Tribunal relating to the subject matter.	
21.	Any appeal against this Environmental Clearance shall lie with the Hon'ble National Green Tribunal, if preferred within a period of 30 days as prescribed under section 16 of the National Green Tribunal Act, 2010	Agreed to comply

(Dr.C.Kaliyaperumal)
Director (S)

Dr. C. KALIYAPERUMAL, M.E., PhD
Director (S)
Government of India
Ministry of Environment, Forests & Climate Change
Regional Office (South Eastern Zone)
HEPC Building, No.34, Cathedral Garden Road,
Nungambakkam, Chennai-600 034.

ECBC Compliance Details

S.No	Norms	Details	Compliance
1	Building envelopes	1. Vertical Fenestration – Glazing Details:	As per image attached. 3.0 mts Canopies are provided on the Vertical Fenestration for Shading thus reducing the Solar Gain.
		2. Canopies :	As per image attached. A overhang of 750 mm. Is provided on all sides of the Soft Roof for shading thus reducing the Solar Gain
		3. Roof Glazing :	**External Walls** are 200 mm AAC blocks with 20 mm thick cement external plaster in 2 coats. U-Value, W/sqm, Deg C -0.65.
		4. Roof Overhang:	**Internal Walls** are 100 mm AAC blocks with 12 mm thick smooth finish plaster . U-Value, W/sqm, Deg C -1.35.
		5. Walls:	**Dry Walls** are 75 mm thick with a thermal conductivity of 0.12 K.cal/h.m◦C. And it is 2 hrs Fire rated. It is also Impact resistant, Fire resistant, Moisture resistant, weather resistant and Asbestos Free.
		6. Multiplex Roof:	Dry Sandwich Panel Roof with 2mm GI wire mesh with 2inch x 2inch grid below. 50 mm rock wool insulation with aluminium foil at bottom. 0.55 mm GI top sheet. U-Value, W/sqm, Deg C -0.33.

S.No	Norms	Details	Compliance
2	HVAC Design details	1. CHILLERS	• Water cooled Screw chillers with VFD. • COP of chillers in excess of 6.0 as per ARI standards • Starting current of chiller is low due to VFD. • Part load COP of the chillers proposed are in excess of 6.4 as per ARI testing standards. • Eco friendly refrigerants like R-134a are used in the chillers. • Modular selection of chiller to ensure optimized operation of chillers and inbuilt redundancy.
		2. PUMPS	• Primary Variable flow inline chilled water reticulation system is proposed to optimize the energy consumption. • Differential pressure across the supply and return chilled water pipes will be monitored and chilled water flow will be varied based on differential pressure. • Condenser pumps will be variable speed and reticulate water through cooling towers which
		3. COOLING TOWER	have fans also with variable speed drives. • Primary Variable flow inline chilled water reticulation system is proposed to optimize the energy consumption. • Differential pressure across the supply and return chilled water pipes will be monitored and chilled water flow will be

S.No	Norms	Details	Compliance
		4. PIPING 5. DUCTING	varied based on differential pressure. • Condenser pumps will be variable speed and reticulate water through cooling towers which have fans also with variable speed drives. • Chilled water condenser water piping system will be sized for low velocity to prevent pipes from pitting internally. • Chilled water pipes will be insulated with insulation material of not less than R-0.35. • Chilled water pipes will also be protected by providing vapor barriers and protected with aluminum sheathing. • Condenser water pipes will be painted with two coats of corrosion free paint. • Balancing valves will be provided in the piping system to ensure hydronic balancing of the chilled water system. • Two way flow control valves with spring return is used to facilitate modulation of chilled water flow through cooling coils during part load conditions. • Spring return on the two way flow control

S.No	Norms	Details	Compliance
			will shut the valve during power failure and also prevent the system from hydronic noise once power resumed • Condensate pipe will be insulated and adequate slope and u traps are provided to ensure free flow of condensate water
3.	Mechanical systems and equipment, including heating, ventilating, and air conditioning	1. Transformers 2. Power factor correction **3.** Checking Meter	1600 KVA – 2 No.s at full load 2 No.s of 500 KVAR APFC with 7% current limiting receptors at main panel and suitably sized (5/25/75 KVAR) capacitor banks at load end. Main panel metered by KVA,KWH as THD. Every feeder is metered by MD,KWH

SYSTEM BALANCING

Air Distribution System

- Air distribution system will be balanced to the design air flow rates at each branch ducts and terminal points.
- All AHUs are provided with VFDs which will be adjusted to meet the design air flow rates.
- Vanilla stores are provided with chilled water fan coil units.
- Balancing of air distribution system will be documented as per testing, commissioning and balancing formats.
- Final balancing of air distribution system will be validated after total occupancy of conditioned space
- All volume control damper will be locked after final balancing.

Hydronic System

- Hydronic system will be provided with isolation valves, balancing valves and differential pressure regulating valves to facilitate hydronic balancing of the system.
- Valves will be installed in the condenser water reticulation system to ensure designed flow rates are maintained across the condensers of main equipment.
- Valves will be hydronically balanced by using digital flow measuring instruments supplied along with valves and the valves will be locked manually to ensure that set flow rate across the valves are not disturbed.
- Each balancing report of air distribution system and hydronic system will be an integral part of the operation and maintenance manuals.

ENERGY SAVING CONCEPTS

- The HVAC system will be designed to better ECBC norms.
- Water cooled high efficiency chilled water system will be used to remove cooling load with low energy consumption.
- Variable speed drives will be used wherever possible to reduce power consumption during part load operation.
- VFD driven Inline centrifugal pumps will be used.
- VFD driven plug type fans will be used in AHUs.
- All motors will be efficiency higher than ECBC requirement.
- **In view of the above energy conservation measures, the proposed HVAC system is expected to operate at 20% higher efficiency than a conventional system.**

BUILDING MANAGEMENT SYSTEM

- The entire air conditioning system will be monitored and controlled by a centralized building management system.
- Building management system will ensure sequential start and stop of air conditioning equipment.
- Indoor air conditions will be monitored and controlled through the BMS using DDC controllers.
- Data logging of all equipment operation and events to ensure periodic maintenance and preventive maintenance of HVAC system.
- Generate reports to facilitate optimization of the entire air conditioning system.

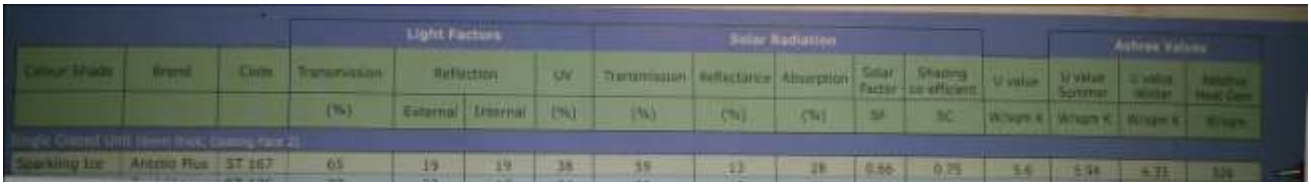

CONNECTED LOAD(LED LIGHTING):-

Lower Ground Floor:-

18W. LED car park lights	290	nos.	x	18	watts	=	5,220.00	watts
18W. LED tube lights	74	nos.	x	18	watts	=	1,332.00	watts
22W. LED Surface mounted light	40	nos.	x	22	watts	=	880.00	watts

Ground Floor area:-

22W. LED Recess mounted light	184	nos.	x	22	watts	=	4,048.00	watts
42W. LED Recess mounted light	18	nos.	x	42	watts	=	756.00	watts
2 x 40W. LED focus light(wall mounted)	45	nos.	x	80	watts	=	3,600.00	watts
15W. LED Recess mounted light	74	nos.	x	15	watts	=	1,110.00	watts
18W. LED tube lights	72	nos.	x	18	watts	=	1,296.00	watts

First Floor area:-

22W. LED Recess mounted light	40	nos.	x	22	watts	=	880.00	watts
2 x 40W. LED focus light(wall mounted)	148	nos.	x	80	watts	=	11,840.00	watts
15W. LED Recess mounted light	78	nos.	x	15	watts	=	1,170.00	watts
18W. LED tube lights	128	nos.	x	18	watts	=	2,304.00	watts

External Area:-

Single Arm Street light on 7mtr. Pole	62	nos.	x	60	watts	=	3,720.00	watts
Double Arm Street light on 7mtr. Pole	42	nos.	x	120	watts	=	5,040.00	watts
LED Uplighters	7	nos.	x	15	watts	=	105.00	watts
LED Wall Bracket Light	4	nos.	x	15	watts	=	60.00	watts
LED Bollard Light	7	nos.	x	15	watts	=	105.00	watts

Second Floor Area(Open):-

Single Arm pole light on 3mtr. Pole	126	nos.	x	48	watts	=	6,048.00	watts
18W. LED tube lights	20	nos.	x	18	watts	=	360.00	watts
							49,874.00	watts

CONNECTED LOAD(CFL LIGHTING):-

Lower Ground Floor:-

28W. Car Park Lights	290	nos.	x	28	watts	=	8,120.00	watts
28W. Tube lights	74	nos.	x	28	watts	=	2,072.00	watts
36W. Surface Mounted light	40	nos.	x	36	watts	=	1,440.00	watts

Ground Floor area:-

36W. Recess mounted light	184	nos.	x	36	watts	=	6,624.00	watts
60W. Recess mounted light	18	nos.	x	60	watts	=	1,080.00	watts
2 x 60W. focus light(wall mounted)	45	nos.	x	120	watts	=	5,400.00	watts
22W. Recess mounted light	74	nos.	x	22	watts	=	1,628.00	watts
28W. Tube lights	72	nos.	x	28	watts	=	2,016.00	watts

First Floor area:-

36W. Recess mounted light	40	nos.	x	36	watts	=	1,440.00	watts
2 x 60W. focus light(wall mounted)	148	nos.	x	120	watts	=	17,760.00	watts
22W. Recess mounted light	78	nos.	x	22	watts	=	1,716.00	watts
28W. Tube lights	128	nos.	x	28	watts	=	3,584.00	watts

External Area:-

Single Arm Street light on 7mtr. Pole	62	nos.	x	125	watts	=	7,750.00	watts
Double Arm Street light on 7mtr. Pole	42	nos.	x	250	watts	=	10,500.00	watts
Uplighters	7	nos.	x	26	watts	=	182.00	watts
Wall Bracket Light	4	nos.	x	26	watts	=	104.00	watts
Bollard Light	7	nos.	x	26	watts	=	182.00	watts

Second Floor Area(Open):-

Single Arm pole light on 3mtr. Pole(70W. Fixture)	126	nos.	x	70	watts	=	8,820.00	watts
28W. tube lights	20	nos.	x	28	watts	=	560.00	watts
							80,978.00	watts

Difference in the connected load(LED v/s CFL)

31,104.00	**Watts**
31.10	**KW**
38.88	**KVA**

ENERGY SAVING MEASURES

ANNEXURE - 5

- Energy efficient Lighting fixtures with electronic ballasts .
- LED light fixtures.
- VFD and APFC Panel on Lifts
- MBBR type STP with VFD
- CO sensors & VFD on Basement Ventilation Fans
- Solar lighting for external lighting
- Solar water heaters

ENERGY SAVING MEASURES

Sr. No	Description	Maximum Demand in (kW)	Power consumption /year without Energy saving measures kWh	Total Consumption / year by using Energy saving measures	Difference in power consumption in kWh	Savings %
1	Common Lighting- (parking + common areas)	47	498094	204524	293570	59%
2	Internal Flat Lighting	85	433935	248693	185242	43%
3	VFD and APFC Panel on Lifts	226.8	118260	82782	35478	30%
4	VFD and APFC Panel on 90% Efficient Water Pumps	66.6	72270	24309	47961	66%
5	MBBR type STP with VFD	88.2	919800	643860	275940	30%
6	VFD & CO sensors for Basement Ventilation fans	42	183960	15330	168630	92%
7	External Lighting	10	43800	9900	33900	77%
8	Water Heating on Solar	940	1143180	84564	1058616	93%
	TOTAL	**1505**	**3413299**	**1313962**	**2099337**	24.4%

EXTERNAL SOLAR LIGHTING

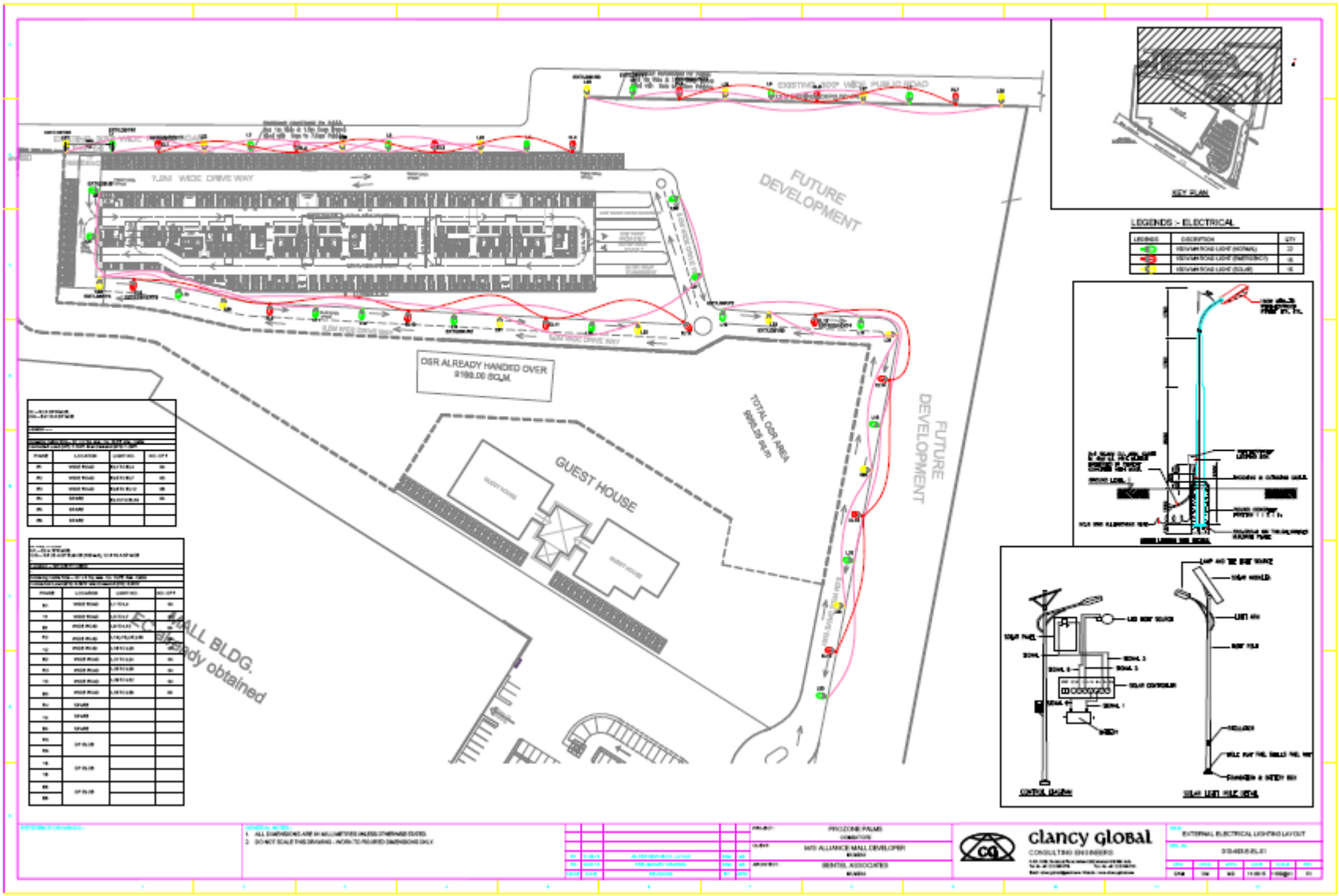

RAIN WATER HARVESTING

- The rain water harvesting is proposed to augment the ground water table and also to meet some of the water requirement of the project during rainy season.

- Roof top water from the terrace is proposed to be collected in rain water harvesting sump which will be used for domestic purposes of the residential apartments after appropriate treatment.

- Storm water run-off road / paved / landscaped areas will be directed to shallow recharge pits constructed along storm water drains for recharging

RAIN WATER HARVESTING CALCULATION

Basic Assumptions:

Peak Hourly Rainfall : 60 mm / hr

Impermeability factors

Roof Top : 0.9

Paved Roads : 0.7

Landscape/Garden : 0.3

Area Statement:

Area	Terrace Area (Sqm)	Road / Paved Area + Surface Parking (Sqm)	Landscape & OSR Area (Sqm)
Area	29355	17776	32153
Run-off Coefficient	0.9	0.7	0.3
Rainfall (m)	0.060	0.060	0.060
Run-off (m^3/h)	1,585	746	578
Total Run Off (m^3/h)	2909		

RAIN WATER HARVESTING PITS- RESIDENTIAL & GUEST HOUSE

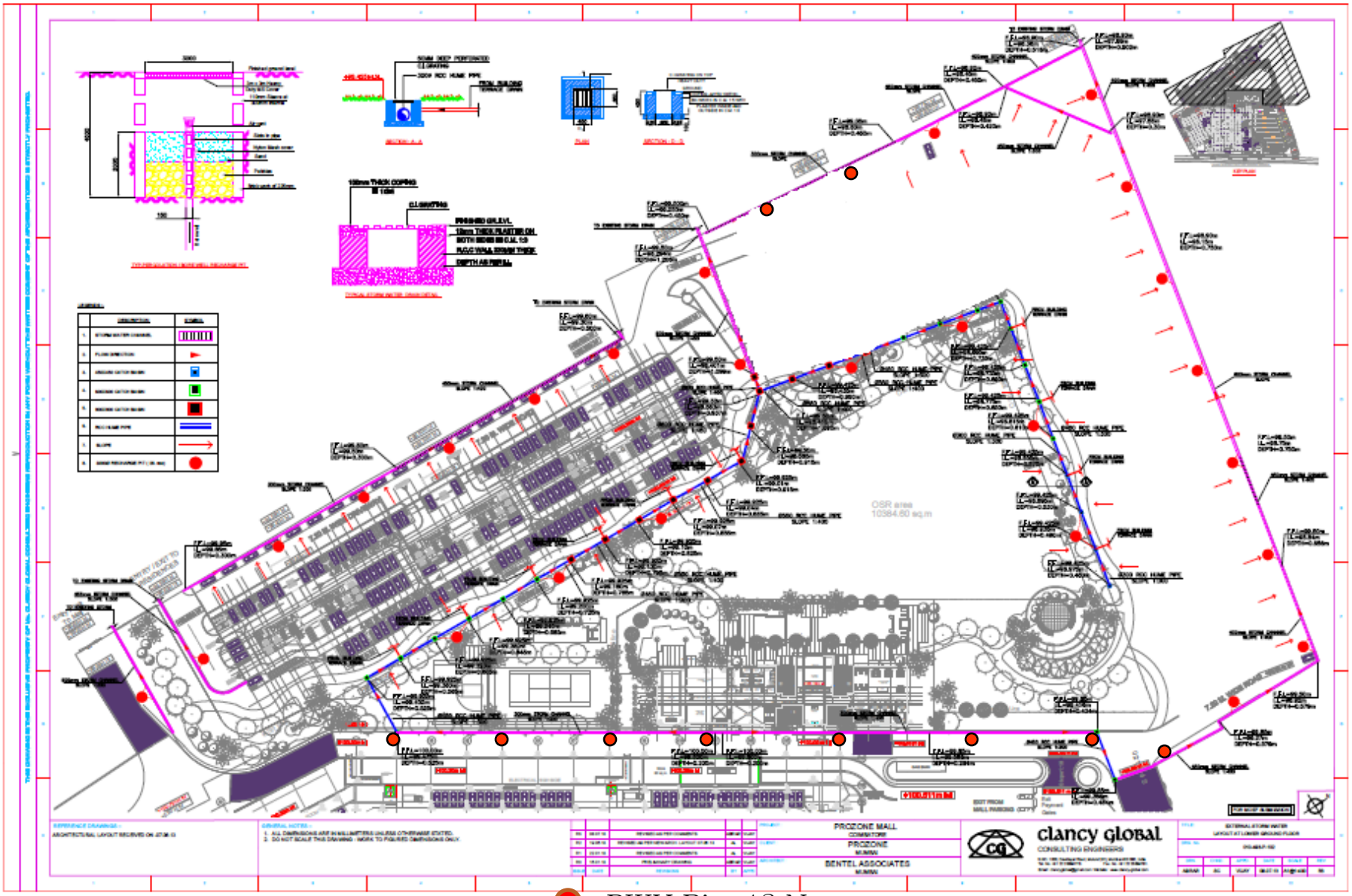

RWH Pits 42 Nos.

STORM WATER MANAGEMENT

Run-off from Terraces

- The run-off from the Terraces shall be separately piped to a under ground Rain water collection tank, after duly filtering the same. This water is proposed to be used as domestic water after necessary treatment
- UG tanks (Rain water) are proposed, with upstream filters

Run-off from Other Areas

- The calculated run-off from other areas is 2909-m^3/hr
- This run-off is proposed to be channelized through storm drains to individual recharge pits and the rain water will be re-charged into under ground aquifers
- As the sub-soil strata is weathered rock zone, a percolation rate of 0.40 is considered with percolation depth as 10-m
- Size of Percolation well - 3.0-m Diameter & 4.5 m Depth
- Storage Volume in each well - 70 m^3
- No of Storage wells required : (2909 / 70) = 42
- Hence, about 26 recharge pits are proposed for mall and 42 pits for residential.
- Total recharge pits are 68 Nos. The excess storm water will be connected to existing storm water drain.

SOLID WASTE MANAGEMENT

Sl. No	Description	Quantity	Method of disposal	Mode of disposal
I	Construction phase			
1.	Excavated Material	Existing:107,770 M^3 Proposed:32,770 M^3 Total:40,540 M^3 (total)	Excavators & Tippers	Will be used for backfilling purpose, road construction.
II	Operational Phase			
1.	Organic Waste	Existing:1786 Kg/ day Proposed: 392 kg/day Total: 2178 Kg/day	Trolley	Will be composed in organic waste convertor and reused at site as manure.
2.	Inorganic Waste	Existing: 2183 Kg/ day Proposed: 914 kg/day Total: 3097 Kg/day	Trolley	Disposed through authorized vendor
3.	STP Sludge	Existing:17 Kg/ day Proposed: 40 kg/day Total: 57 Kg/day	Trolley	Used as manure for landscaping & gardening purpose after composting

Note: The NBC norms were considered solid waste management.

PARKING STATEMENT

Mall (Existing)

Description	Four Wheeler	Two Wheeler
Total Parking Provided	1100	430
Parking required As per DTCP	827	-

Residential & Guest House (Proposed)

Description	Four Wheeler	Two Wheelers
	Nos.	Nos.
Basement	126	183
Stilt 1	117	171
Surface	122	-
Total Parking Provided	355	354
Parking Required as per DTCP	324	216

Parking details were calculated based on the National Building Code (NBC)

TRAFFIC CIRCULATION PLAN- RESIDENTIAL & GUEST HOUSE

WATER REQUIRMENT –RESIDENTIAL & GUEST HOUSE

WATER DEMAND CALCULATION FOR GUEST HOUSE & RESIDENTIAL PROJECT AT COIMBATORE						
Sr. No.	Tower Type	No of Unit	Total Population	Total Water Per Day	Domestic Water	Flushing Water
		(Nos.)	(Nos.)	(Litre/person)	(Litre/person)	(Litre/person)
1	Tower A	216	1,080	1,45,800	97,200	48,600
			5	135	90	45
			Persons/Unit	Litres/Person	Litres/Person	Litres/Person
2	Tower B	144	720	97,200	64,800	32,400
			5	135	90	45
			Persons/Unit	Litres/Person	Litres/Person	Litres/Person
3	Tower C	180	900	1,21,500	81,000	40,500
			5	135	90	45
			Persons/Unit	Litres/Person	Litres/Person	Litres/Person
4	Landscaping (In sq Mtr)	5251		18,379	0	18,379
				3.5	0	3.5
				Litres/Sqmtr	Litres/Sqmtr	Litres/Sqmtr
5	Guest House (in Sq.ft)	13773	200	27,000	18,000	9,000
			-	135	90	45
			Persons-Guest House	Litres/Person	Litres/Person	Litres/Person
Total Water Requirement (KLD)					261.0	148.9
Total Water Requirement in Non-monsoon (KLD)					410	
Total Water Requirement in monsoon (KLD)					391	
Sewage Generation (80% OF domestic + 100% Flushing)					330	
STP (KLD) 18% Extra					390	

WATER BALANCE – RESIDENTIAL & GUEST HOUSE

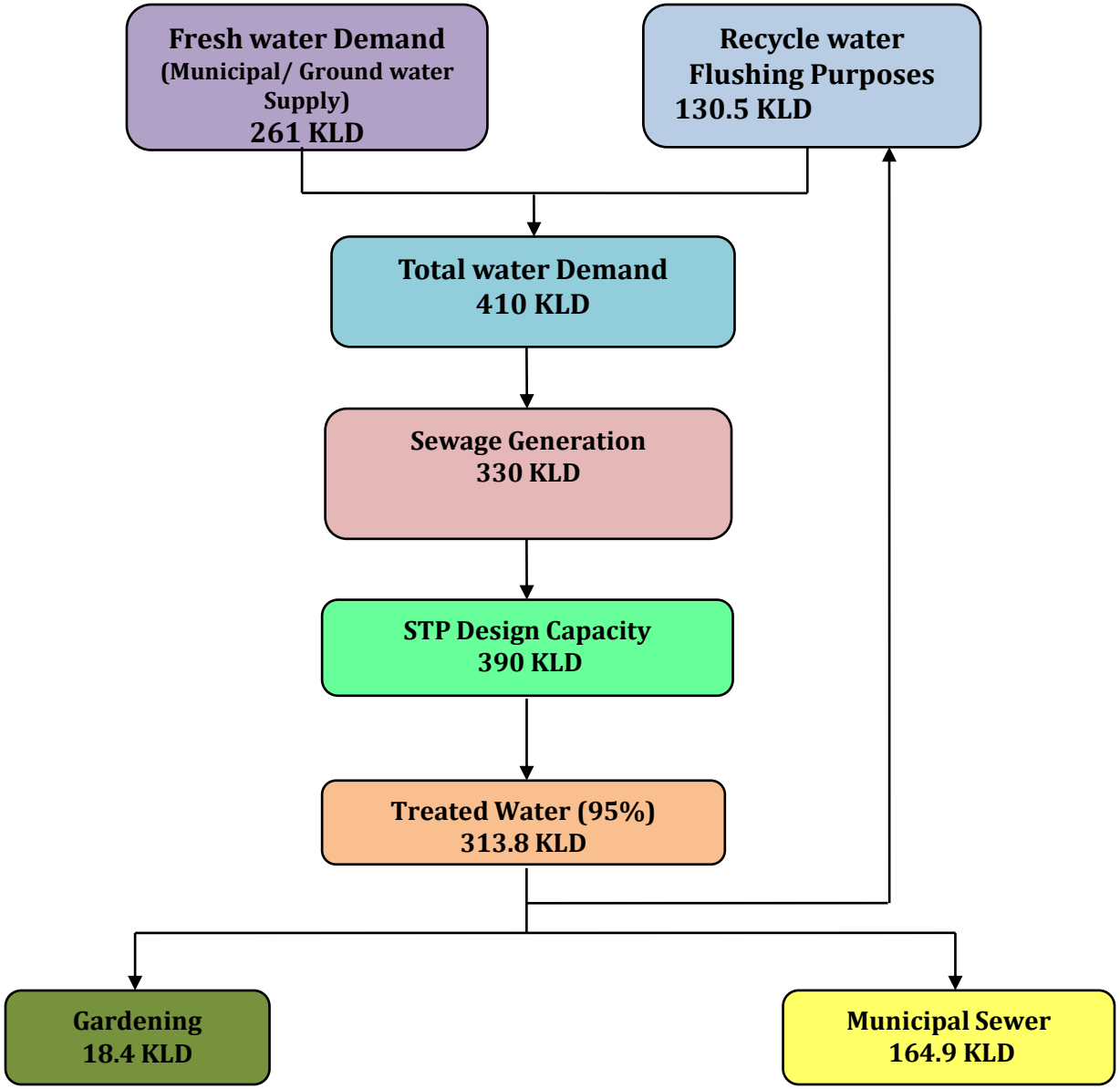

WATER REQUIRMENT - MALL

Bldg. Type/Description	Population	Water Required Per Day (Lts)		
		Domestic	Flushing	Total
LOWER GROUND FLOOR				
Mall (Retail Area)	113	2263	2829	5093
Mall (Retail Area)-Floating	871	8705	4353	13058
CAR PARKING (587 + 422 Bays)	303	3027	1514	4541
GROUND FLOOR				
Mall (Retail Area)	386	7717	9646	17363
Mall (Retail Area)-Floating	2968	29680	14840	44519
FIRST FLOOR				
Mall (Retail Area)	300	6001	7501	13502
Mall (Retail Area)-Floating	2308	23080	11540	34620
RESTAURANT AREA	330	19779	3297	23076
KIOSK.(Permanent)	15	302	378	680
FOOD COURT	40	797	997	1794
FOOD COURT (Floating)	747	7474	3737	11211
SECOND FLOOR				
MULTIPLEX (2400 seats)	2400	24000	12000	36000
MULTIPLEX STAFF (Permanent)	120	2400	3000	5400
MALL MANAGEMENT STAFF	100	2000	2500	4500
	Total (Lts/Day)	137225	78130	215355
	Total (Cum/Day)	137	78	215

WATER BALANCE - MALL

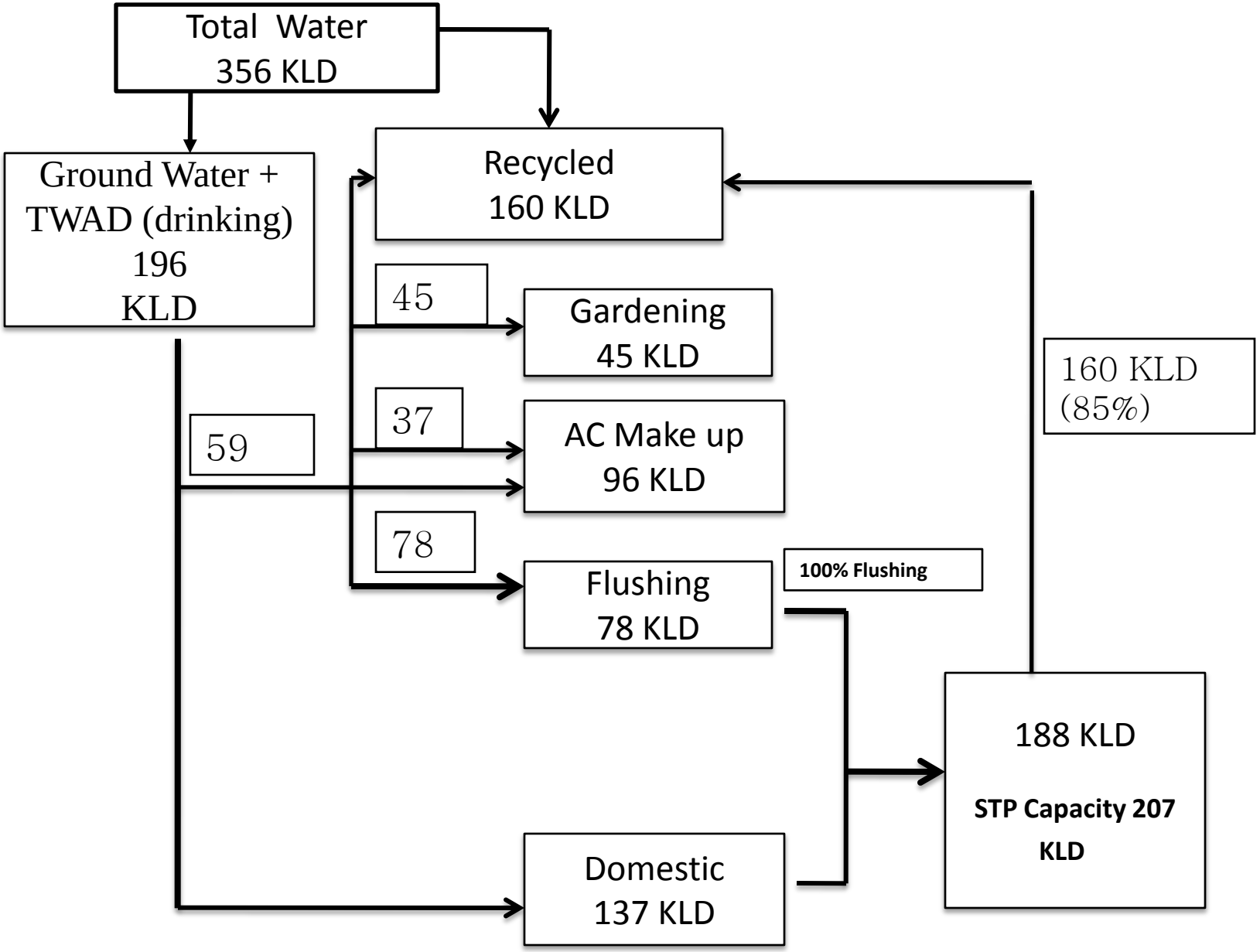

LETTER FOR WATER SUPPLY

ANNEXURE - 10

Circle Code No. 057. E.Mail : secnc@dataone.in
Phone No. 0422- 2380722 Fax No. 0422-2380311

TAMILNADU WATER SUPPLY & DRAINAGE BOARD

From
Er.C.R. Surendra Babu, M.E.(Stru.),
Superintending Engineer (A/c),
TWAD Board,
Coimbatore-Nilgiris Circle,
26, Corporation Shopping Complex,
Avinashi Road,
Coimbatore - 641 018.

To
M/s. Alliance Mall Developers Company
Pvt. Ltd.,
Post Box No.5910,
Saravanampatti P.O.,
Coimbatore 641 035.

Lr.No. 7603/AE I/CNC/2010/dt. 06.09.2010

Sir,

Sub: Request for water supply – Reg.

Ref: Your letter dt. 20.08.2010

Your request for water supply to your premises will be considered on completion of Pillur Phase II Scheme and as per rules in force at that time, with the concurrence of Local body concerned.

C.R. Surendra Babu,
Superintending Engineer (A/c)

For Superintending Engineer, TWAD Board,
Coimbatore-Nilgiris Circle, Coimbatore.

GROUND WATER CLEARANCE

भारत सरकार
केन्द्रीय भूमि जल प्राधिकरण
जल संसाधन मंत्रालय

Superintending Hydrogeologist

Government of India
Central Ground Water Authority
Ministry of Water Resources

CGWA/IND/Proj/2014- 1537

No.21-4(373)/SECR/CGWA/2013- 1197 Dated:- 05 AUG 2014

To

M/s Alliance Mall Developers Co. Pvt Ltd.,
105/106, Provogue House, Off. New Link Road,
Andheri (W), Mumbai-400053, Maharashtra

Sub:- NOC for ground water withdrawal to M/s Alliance Mall Developers Co. Pvt Ltd., in respect of its proposed commercial complex located at S.F. 199 (Part), SF 200, SF 201, SF 205 (Part), SF 206, Village Sarvanampatti, Block Sarkarsammakulam, Taluka Coimbatore North, District Coimbatore, Tamil Nadu – reg.

Refer to your application dated 13.12.2012 on the above cited subject. Based on the recommendations of Regional Director, Central Ground Water Board, South Eastern Coastal Region, Chennai vide their office letter no. T/(8)/46-CBM-1/2013-1783 dated 25.7.2013 and subsequent letter dated 13.1.2014 & 28.5.2014 and further deliberations on the subject, the NOC of Central Ground Water Authority is hereby accorded for ground water withdrawal to **M/s Alliance Mall Developers Co. Pvt Ltd., in respect of its proposed commercial complex located at S.F. 199 (Part), SF 200, SF 201, SF 205 (Part), SF 206, Village Sarvanampatti, Block Sarkarsammakulam, Taluka Coimbatore North, District Coimbatore, Tamil Nadu**. The NOC is, however subject to the following conditions:-

1. The firm may withdraw **196 m³/day** (not exceeding 71,540 m³/year) of ground water, through existing one (1) dugwell and proposed five (5) borewells only. No additional ground water abstraction structure to be constructed for this purpose without prior approval of the CGWA.
2. The wells to be fitted with water meter by the firm at its own cost and monitoring of ground water abstraction to be undertaken accordingly on regular basis, at least once in a month. The ground water quality to be monitored twice in a year during pre monsoon and post monsoon periods.
3. **M/s Alliance Mall Developers Co. Pvt Ltd.,** shall, in consultation with the Regional Director, Central Ground Water Board, South Eastern Coastal Region, Chennai implement ground water recharge measures to the tune of **52,290 m³/year** as proposed for augmenting the ground water resources of the area.
4. The photographs of the recharge structures after completion of the same are to be furnished immediately to the Regional Director, Central Ground Water Board, South Eastern Coastal Region, Chennai for verification and under intimation to this office.

West Block - 2, Wing - 3, Sector - 1, R.K. Puram, New Delhi - 110066
Tel : 011-26175362, 26175373, 26175379 • Fax : 011-26175369
Website : www.cgwb.gov.in, www.mowr.gov.in
स्वच्छ सुरक्षित जल - सुन्दर खुशहाल कल
CONSERVE WATER - SAVE LIFE

5. The firm at its own cost shall install piezometers at suitable locations and execute ground water regime monitoring programme in and around the ground water abstraction area on regular basis in consultation with the Central Ground Water Board, South Eastern Coastal Region, Chennai.
6. The ground water monitoring data in respect of S. No. 2 & 5 to be submitted to Central Ground Water Board, South Eastern Coastal Region, Chennai, on regular basis at least once in a year.
7. The firm shall ensure proper recycling and reuse of waste water after adequate treatment in their project area.
8. Action taken report in respect of S. No. 1 to 7 may be submitted to CGWA within one year period.
9. The permission is liable to be cancelled in case of non-compliance of any of the conditions as mentioned in S. No. 1 to 8.
10. This NOC is subject to prevailing Central/State Government rules/laws or Court orders related to construction of tubewell/ground water withdrawal/construction of recharge or conservation or conservation structures/discharge of effluents or any such matter as applicable.
11. This NOC does not absolve the applicant / proponent of his obligation / requirement to obtain other statutory and administrative clearances from other statutory and administrative authorities.
12. The NOC does not imply that other statutory / administrative clearances shall be granted to the project by the concerned authorities. Such authorities would consider the project on merits and be taking decisions independently of the NOC.
13. This NOC is valid for two years from the date of issue of this letter.

Superintending Hydrogeologist

Copy to:

1. The Member Secretary, Tamil Nadu Pollution Control Board, 76, Mount Salai, Guindy, Chennai-600032, Tamil Nadu.
2. The Additional Director, Ministry of Environment and Forests (IA-III Division), Paryavaran Bhawan, CGO Complex, Lodhi Road, New Delhi-110003.
3. The Regional Director, Central Ground Water Board, South Eastern Coastal Region, Chennai. This has reference to your letter no. T/(8)/46-CBM-1/2013-1783 dated 25.7.2013 and subsequent letter dated 13.1.2014 & 28.5.2014.
4. TS to the Chairman, Central Ground Water Board, Bhujal Bhawan, Faridabad.
5. The District Collector, Coimbatore District, Tamil Nadu.
6. Guard File 2014-15.

Superintending Hydrogeologist

LOCATION OF STP

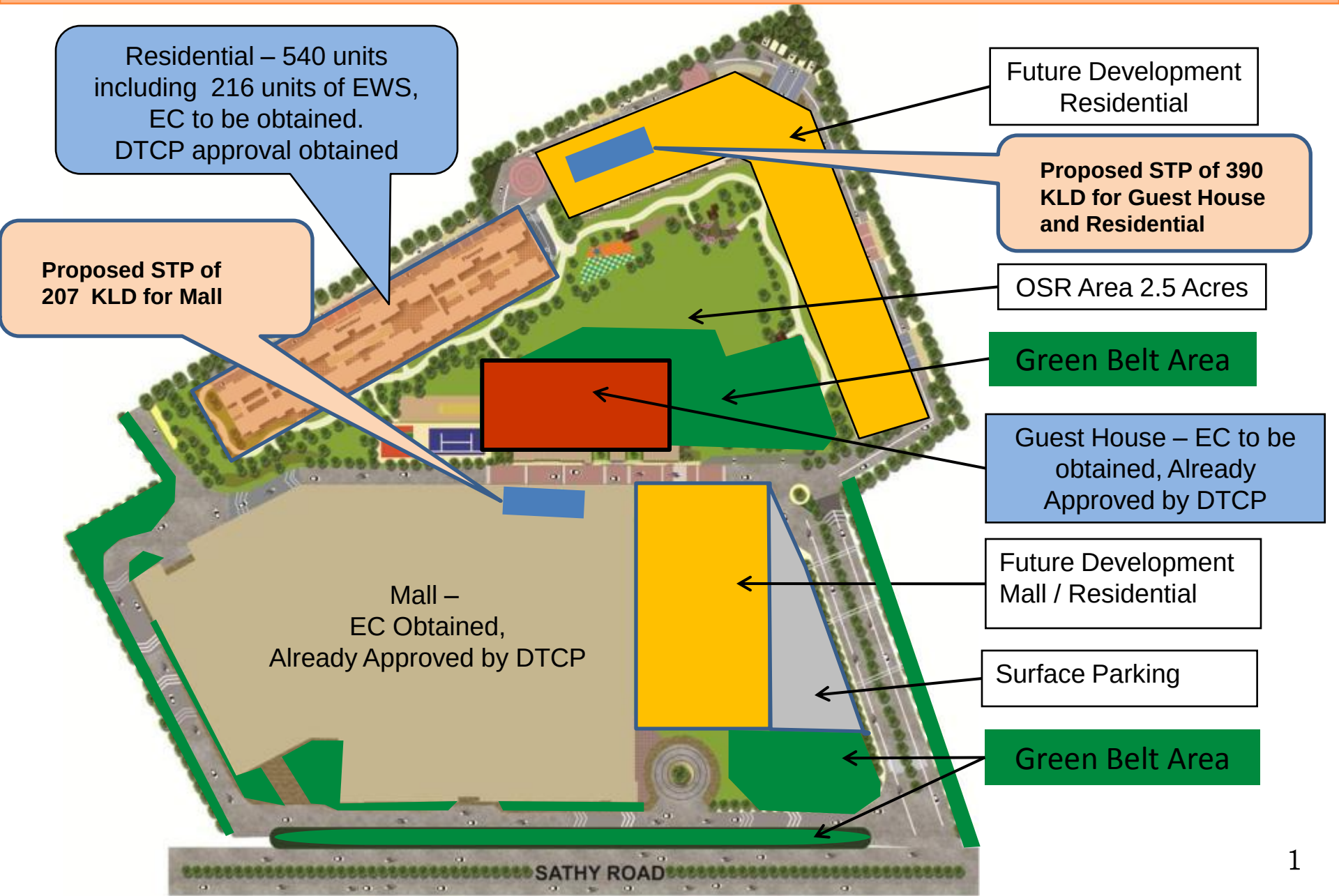

POWER REQUIRMENT & DG STACK DETAILS

- Power Source : TNEB
- Power Requirement :

Particulars	Existing	Proposed	Total
Connected Load	8864 KVA	9525 KVA	18389 KVA
Demand Load	4464 KVA	3232 KVA	7696 KVA

- Backup Power : Thro' DG Sets
- Proposed DG Sets :

Particulars	Existing	Proposed
DG Set	2 x 1500 KVA	1x400 KVA

MoEF / CPCB requirement

S. No	DG Capacity	Required Stack Ht (m)	Proposed Stack Ht (m)
1	1X400kVA	59.8m + 3.5m = 63.3	63.5 (Proposed)
2	2 x 1500 KVA	13.9 +6m = 19.9	20m (Existing)

IF ANY DOUBT ASK

NOTES / SPECIFICATIONS:

RATING : 1500 kVA

1. ENGINE : CUMMINS KTA-50-G8-I (RADIATOR COOLED)
2. ALTERNATOR : STAMFORD - 1500 KVA
3. DG-SET WITH BASE IS SUPPORTED ON AVM PADs & RESTING ON FOUNDATION.
4. THE DG-SET WITH EXHAUST PIPING, SILENCERS & RAIN CAP ARE TO BE INSTALLED AT SITE.
5. CONSTRUCTION DETAILS/SPECIFICATIONS:

(ACOUSTIC MODULES)		(STRUCTURE)	
OUTER BODY	- 1.6mm Thk.(16G) CRCA	DG-BASE SECTION	- ISMC 300
DOORS	- 1.6mm Thk.(16G) CRCA	ACOUSTIC BASE	- 3mm Thk HR SHT FORMED SECTION
INNER SURFACE	- 0.5mm Thk. G.I PERFORATED SHEET.	ACOUSTIC STRUCTURE	- 2mm Thk CR SHT FORMED SECTION
SOUND INSULATION	- 100mm Thk. ROCK WOOL.(64 Kg/M^3)		

6. THE ACOUSTIC IS OF MODULAR TYPE & IS TO BE ASSEMBLED AT SITE.
7. THE ISOLATOR PANEL (1 ACB TYPE) IS TO BE LOCATED OUT OF THE ACOUSTIC ENCLOSURE, PREFERABLY IN A SEPERATE ROOM/ SHELTERED AREA.
8. THE BATTERIES ARE LOCATED BESIDES THE DGSET, WITHIN THE ACOUSTIC & ARE EASILY MAINTAINABLE.
9. THE ACOUSTIC WILL BE PROVIDED WITH 2 Nos. 40 WATTS TUBE LIGHT FOR INSIDE ILLUMINATION.
10. THE FUEL TANK (990 Lts) IS OF A RECTANGULAR CONFIGURATION (1250 Lg x 750 W x 1250mm Ht.) AND IS LOCATED INSIDE THE ACOUSTIC.
11. THE NOISE LEVEL WILL BE 80 dBA AVG. AT 1M DISTANCE FROM THE ACOUSTIC AT FREE FIELD CONDITIONS.
12. FLOOR (INCL. MOVING AROUND) SPACE REQUIRED FOR INSTALLATION : 13000 MM LENGTH x 5600 MM WIDTH.
13. SURFACE COATING SPECIFICATIONS:

THE ACOUSTIC ENCLOSURE PARTS WILL BE POWDER COATED AFTER 7-TANK PRE-TREATMENT PROCESS.
THE POWDER COATING SHADE WILL BE 'GENSET GREEN'.
BASE FRAME OF ACOUSTIC & DG-SET WILL BE EPOXY PAINTED IN 'BLACK' SHADE.

GROSS SYSTEM WET WEIGHT :- 20800 kg (max)

(Ref Drg No.: PTS/K1500/BG-02)

This drawing is the property of POWERICA LIMITED. it must not be disclosed, copied or lent to a third party without written consent of POWERICA LIMITED.

Client: M/S. PROZONE	Title : 1500 KVA - RADIATOR COOLED DGSET WITH MODULAR ACOUSTIC.	Title: GENERAL SPECIFICATIONS					Rev 00
Project:-	Consultant:	Drn.	PRASHANT	04.05.10	Drawing No.	Scale	NTS
		Chkd.	SB	04.05.10	PTS/K1500/BG-02-A (SPECS)	Ref.	
Rev.No. Drn. Chkd.	Date. Revision Details	Appd.				Sheet	01 OF 04

POWERICA LIMITED

IF ANY DOUBT ASK

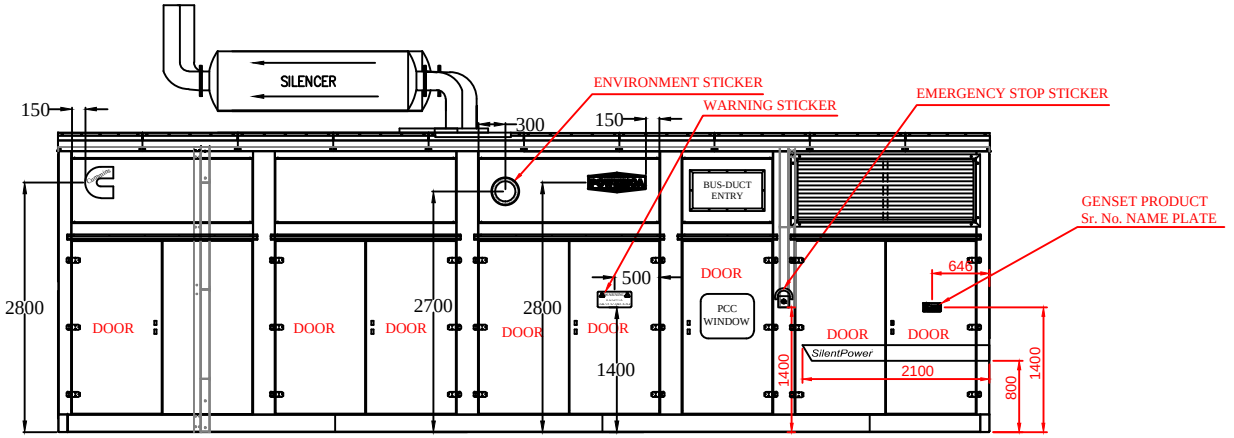

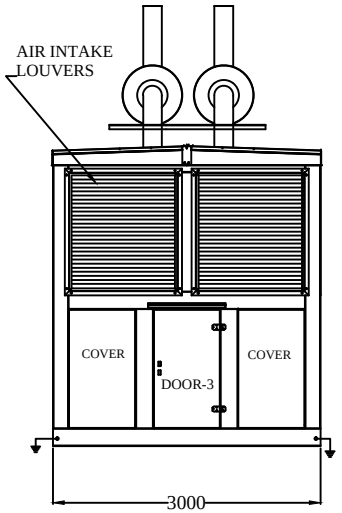

ALTERNATOR END

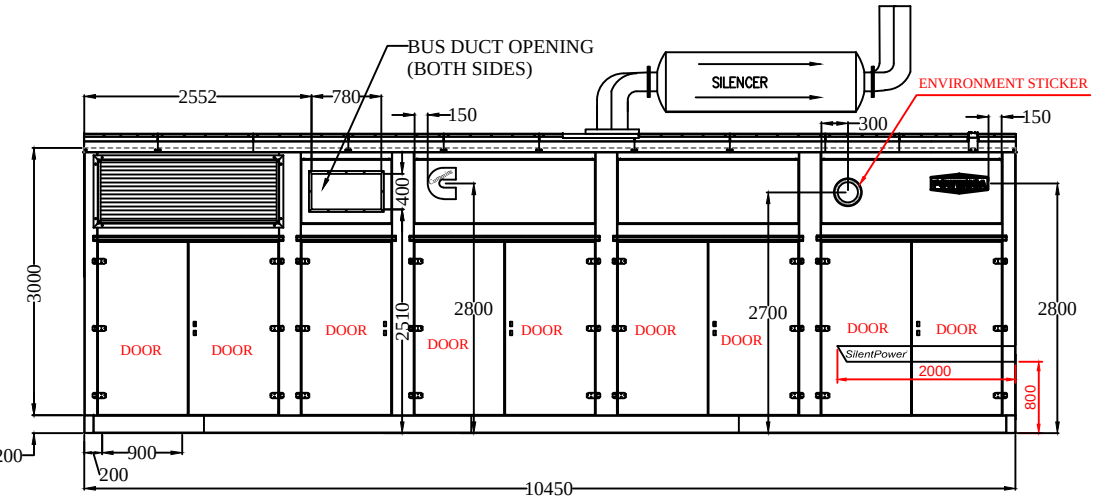

LEFT SIDE ELEVATION

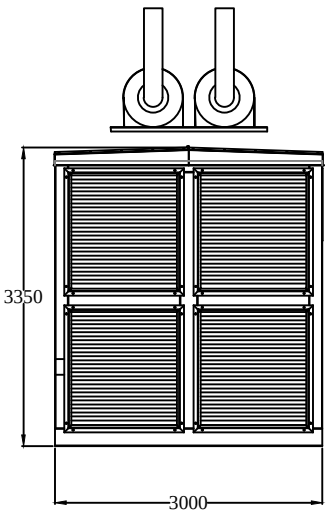

RADIATOR END

FRONT VIEW

(Ref Drg No.: PTS/K1500/BG-02)

Client: M/S. PROZONE				Title : 1500 KVA – RADIATOR COOLED DGSET WITH MODULAR ACOUSTIC.			
Project:–				Consultant:			
	Rev.No.	Drn.	Chkd.	Date.	Revision Details		

Title: LOCATIONS OF PRODUCT STICKERS/LOGOS						Rev 00
Drn.	PRASHANT		04.05.10	Drawing No.	Scale	NTS
Chkd.	SB		04.05.10	PTS/K1500/BG-02-A (STICKERS)	Ref.	
Appd.					Sheet	02 OF 04

POWERICA LIMITED

This drawing is the property of POWERICA LIMITED. it must not be disclosed, copied or lent to a third party without written consent of POWERICA LIMITED.

IF ANY DOUBT ASK

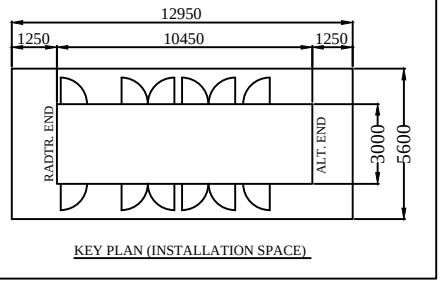

KEY PLAN (INSTALLATION SPACE)

WEIGHT Kg		ENGINE LOADING IN KGS			
			STATIC	DYNAMIC	
ENGINE	5690.0				
ALTERNATOR	3634.0	FRONT SUPPORT	1362.0	477.0	(VERTICAL)
SUBBASE	1065.0			732.0	(HORIZONTAL)
RADIATOR	1515.0	REAR SUPPORT	1483.0	519.0	(VERTICAL)
ACCESSORY	500.0			568.0	(HORIZONTAL)
ACOUSTIC	7100.0				
TANK	200.0				
TOTAL (DRY)	19704.0				

TOTAL (WET) 20.6 TONS (MAX)

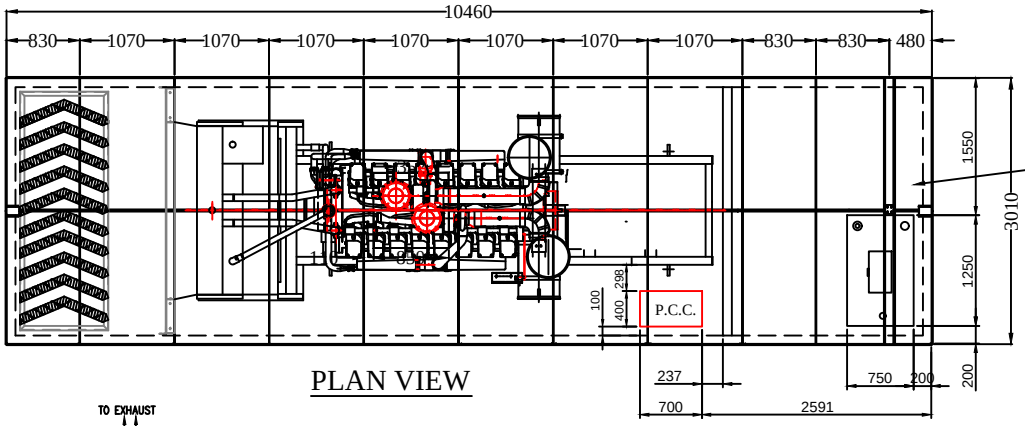

PLAN VIEW

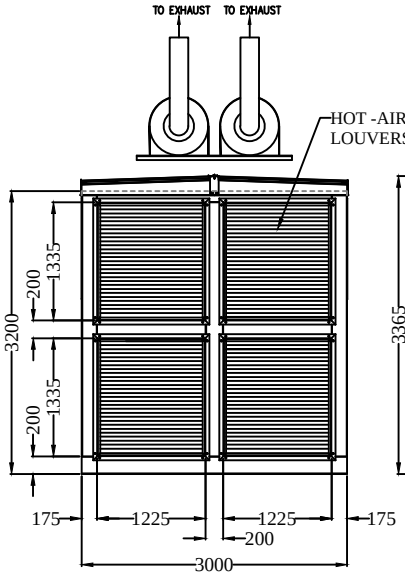

RADIATOR END

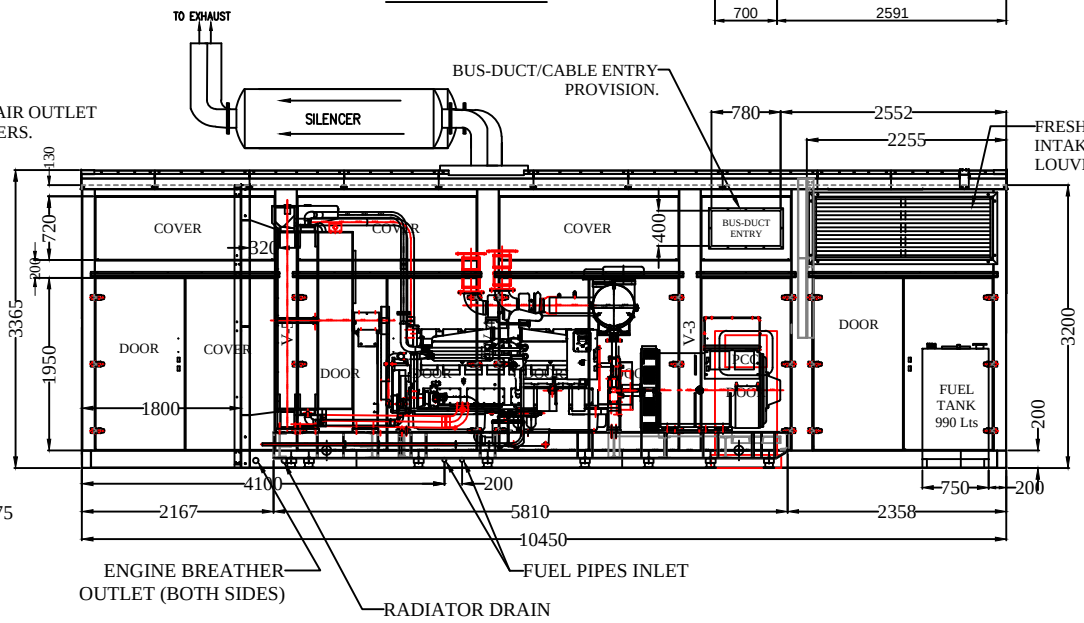

RIGHT SIDE ELEVATION

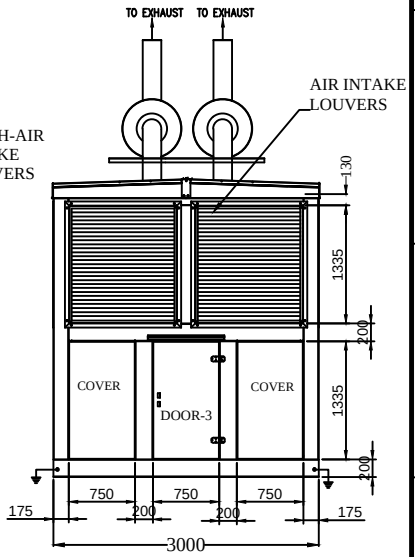

ALTERNATOR END

(Ref Drg No.: PTS/K1500/BG-02)

Client: M/S. PROZONE				Title : 1500 KVA - RADIATOR COOLED DGSET WITH MODULAR ACOUSTIC.	
Project:-				Consultant:	
	Rev.No.	Drn.	Chkd.	Date.	Revision Details

Title: 1500 KVA D.G.SET ACOUSTIC ASSEMBLY LAYOUT					Rev 00
Drn.	PRASHANT		04.05.10	Drawing No.	Scale NTS
Chkd.	S.B.		04.05.10	PTS/K1500/BG-02-A (GA DRG)	Ref.
Appd.					Sheet 03 OF 04

POWERICA LIMITED

This drawing is the property of POWERICA LIMITED. it must not be disclosed, copied or lent to a third party without written consent of POWERICA LIMITED.

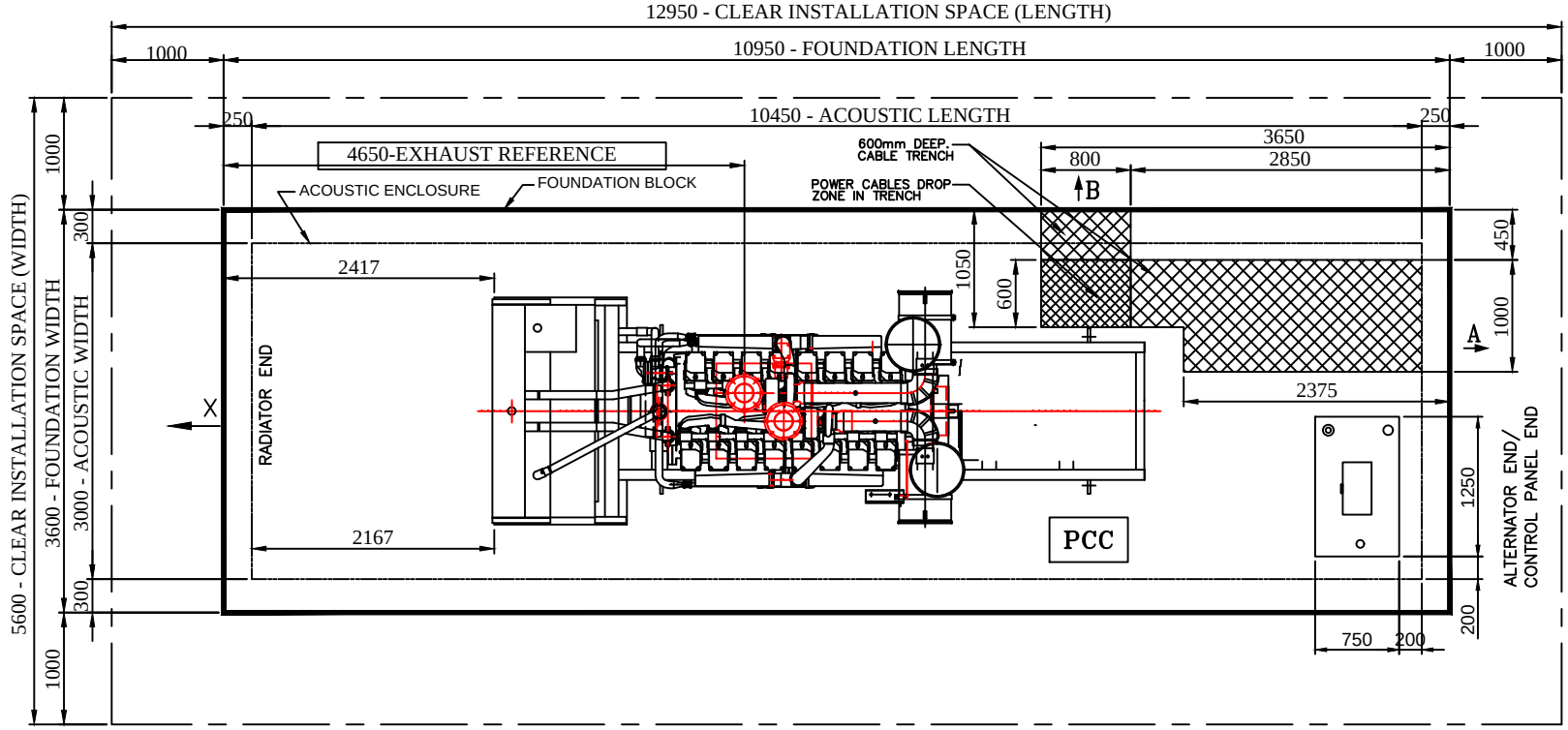

FOUNDATION PLAN

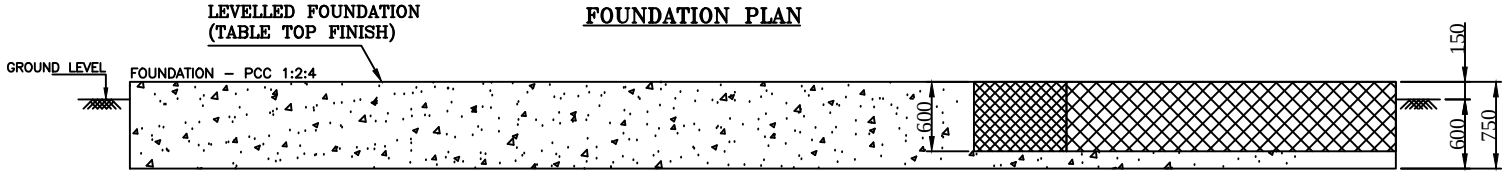

CROSS-SECTION ELEV. (FDN)

NOTE:
1) CABLE TRENCH TO BE CAST IN DIRECTION 'A' OR 'B', AS REQUIRED AT SITE.

NOTE –
1) TRENCHES ARE REQUIRED FOR CABLE ENTRY, UNLESS THROUGH BUSDUCT.
2) FOUNDATION IS CONSIDERING MINIMUM SBC = 5 T/SQ.M
3) THE CASTING OF FOUNDATION AT CUSTOMER SITE/PREMISES, SHOULD BE DONE AFTER CONFIRMING THE SITE LOCATION & SUITABILITY FOR INSTALLATION.
4) THE RADIATOR HOT-AIR FLOW IS ON THE DIRECTION 'X' AND THERE SHOULD BE NO OBSTRUCTION FOR A DISTANCE OF 3 MTS FROM THE ACOUSTIC.

(Ref Drg No.: PTS/K1500/BG-02)

Client: M/S. PROZONE				Title : 1500 KVA – RADIATOR COOLED MODULAR ACOUSTIC DG SET.		SUB-TITLE: FOUNDATION PLAN	R 00
Order Ref:				Consultant:		Drn. PRASHANT 04.05.10	Drawing No. PTS/K1500/BG-02-A (FDN)
						Chkd. SB 04.05.10	Scale NTS
						Appd.	Ref. --
	Rev.No.	Drn.	Chkd.	Date.	Revision		Sheet 04 OF 04

ALL DIMENSIONS ARE IN mm

POWERICA LIMITED

IF ANY DOUBT ASK

This drawing is the property of POWERICA LIMITED. it must not be disclosed, copied or lent to a third party without written consent of POWERICA LIMITED.